Common Specification F-CS-B-0005e:

Integration of the Beam Position Monitoring System into the Controls & Operation Environment

https://edms.cern.ch/document/1823368/

J. Fitzek, O. Chorniy, K. Lang, D. Ondreka, R. Singh, R. Steinhagen

Scope

- BPMs are bread-and-butter instruments after beam-trafos
- Primary goals:
  - improve use of beam-based optimisation techniques → better qualitative and quantitative beam/machine performance
    - better reproducibility of beam parameters
    - faster/more reliable setup of new BPCs
  - simplification and deployment of same optimisation, tools, OP paradigm for all FAIR (and existing) accelerators
    → no resources to support for “isolated island” solutions
    - abstraction of vendor specific HW & SW interfaces

OP Context: LSA enabling Beam-based cycle-to-cycle feedbacks

Generic Beam Control (focus on use-case):

1. Transmission Monitoring System
   (R. Steinhagen, FC²WG Meeting #6)
2. Orbit Control (work in progress)
3. Trajectory Control (threading, inj./extr., targets)
4. Q/Q'(') Diagnostics & Control
5. TL&Ring Optics Measurement + Control (LOCO, AC-dipole techniques etc.,)
6. RF Capture and (later) RF gymnastics
7. Longitudinal Emittance Measurement
8. Transverse emittance measurement
9. Transverse and longitudinal feedbacks

Bread-and-Butter systems for OP ~ ideally for SIS18 restart

Machine-specific Beam-Based Systems:

- SIS18: multi-turn-Injection (N.B. highly non-trivial, complex subject), Slow-Extraction (K.O. exciter, spill-structure, …)
- SIS100: Slow-Extraction (K.O. exciter, spill-structure, …), RF Bunch Merging and Compression
- ESR, HESR & CR: Stochastic cooling, Schottky diagnostics, …, tbd.

Generic:

- Remote DAQ of Analog Signals
  (strong impact on HKR migration/operation!)
- Facility-wide fixed-displays, facility & Machine Status (“Page One”)
- context-based monitoring of controls and accelerator Infrastructure,
- … *“the sky is the limit”*

Scope of System and Specification

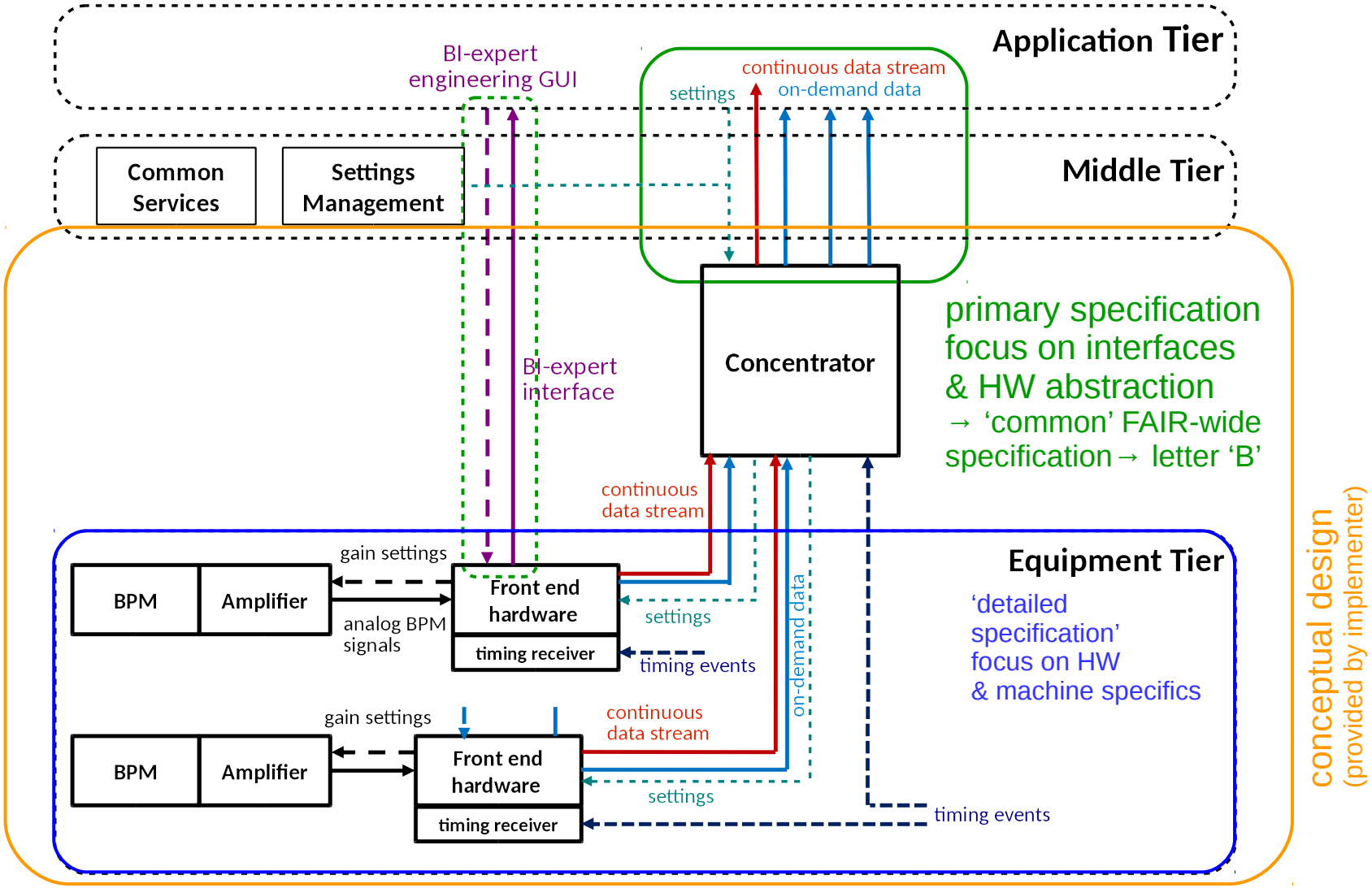

Tentative List of Known Users/Use-Cases

A Cycle-to-Cycle Feedbacks

1. *Injection Steering* *<orbit & trajectory>*
2. *Extraction Steering* *<orbit & trajectory>*
3. *Cycle-to-Cycle Orbit-Feedback (& Radial-Loop)* *<orbit interface only>*

B Archiving System

1. *Regular/OP Archiving* *<orbit & trajectory>*
2. *Post-Mortem System* *<trajectory interface>*

C Machine-Protection

1. *Software Interlock System / MASP* *<orbit & trajectory>*

D Optics Measurement

1. *LOCO-based* *<orbit & trajectory>*
2. *Optics via phase-advance* *<trajectory interface>*

E Machine Specific Clients

1. *Multi-Turn Injection Optimisation (SIS18, CRYRING)* *<orbit & trajectory>*
2. *Collimator/Cleaning set-up (SIS100)* *<orbit interface>*
3. *MPS validation (SIS100)* *<orbit & trajectory>*
4. *Luminosity Steering (HESR)* *<orbit & trajectory>*

F *Machine-Development*

1. *bunch-by-bunch expert diagnostics* *<bunch-by-bunch>*
2. *machine development specific applications* *<orbit & trajectory>*

Important constraint:

use-cases have to be served and data has to be provided *in parallel* for all beam production chains (BPCs)

↔ multi-user || optimisation

Example Clients: Orbit (avg. Trajectory)

- Global orbit
  - minimise the aperture requirements; monitor/log closed orbit
  - improve machine reproducibility (e.g. w.r.t. dynamic aperture & slow-extraction)
- Local orbit at critical points – fine control of aperture limits (collimators, septa, etc.)
- Machine Alignment – beam-based alignment of quadrupoles, BPMs etc.
- Linear optics model ↔ LOCO (N.B. rel. slow method)
  - Integer tunes – Fourier analyse of closed orbit
  - Dispersion D(s) – closed orbit versus momentum deviation
  - measure β(s) and μ(s), BPM & orbit corrector calibration, polarity checks
  - search for optics imperfections
- Non-linear optics model: b_2/a_2 to b_5, b_3/a_3 etc.
  - polarity checks of higher-order multipoles
  - optics linearisation

Example Clients: Trajectory and Oscillations

- Trajectory – beam threading, close trajectory on itself, visual inspection
- Position and momentum error at injection
  - Subtract orbit from first-turn trajectory and compute x,px,y,py at injection (injection matching)
    - N.B. this includes also HEBT BPMs
  - Deduce momentum from trajectory averaged over the azimuth → controls the SIS18/SIS100 energy matching
- Linear optics model ↔ beta-beating via. phase-advance measurement (N.B. rel. fast method)
  - measure β(s) and μ(s) at injection, ramp, extraction, optics changes due to γ_t shift
  - search for optics imperfections
- Phase space measurement
  - separatrix of slow-extraction → sextupole adjustment: amplitude & phase
  - dynamic aperture, driving terms
- Local chromaticity
  - Dependence of β(s) and μ(s) on momentum for the measurement of b_3 versus azimuth
- Local impedance – dependence of μ(s) on beam intensity
- Local coupling – Identify the local 4D transport matrices
- Optional/complementary (ie. covered by dedicated Q/Q' diagnostics):
  - Transverse spectrum
    - Check on the presence and amplitude of harmonics of the betatron oscillation
  - Fast Tune → measurement of the tunes with all the BPM's
  - Frequency maps → Variation of (fast) tunes with initial conditions for visual inspection of the non-linearity

Data Acquisition, Client Interfaces & Synchronisation

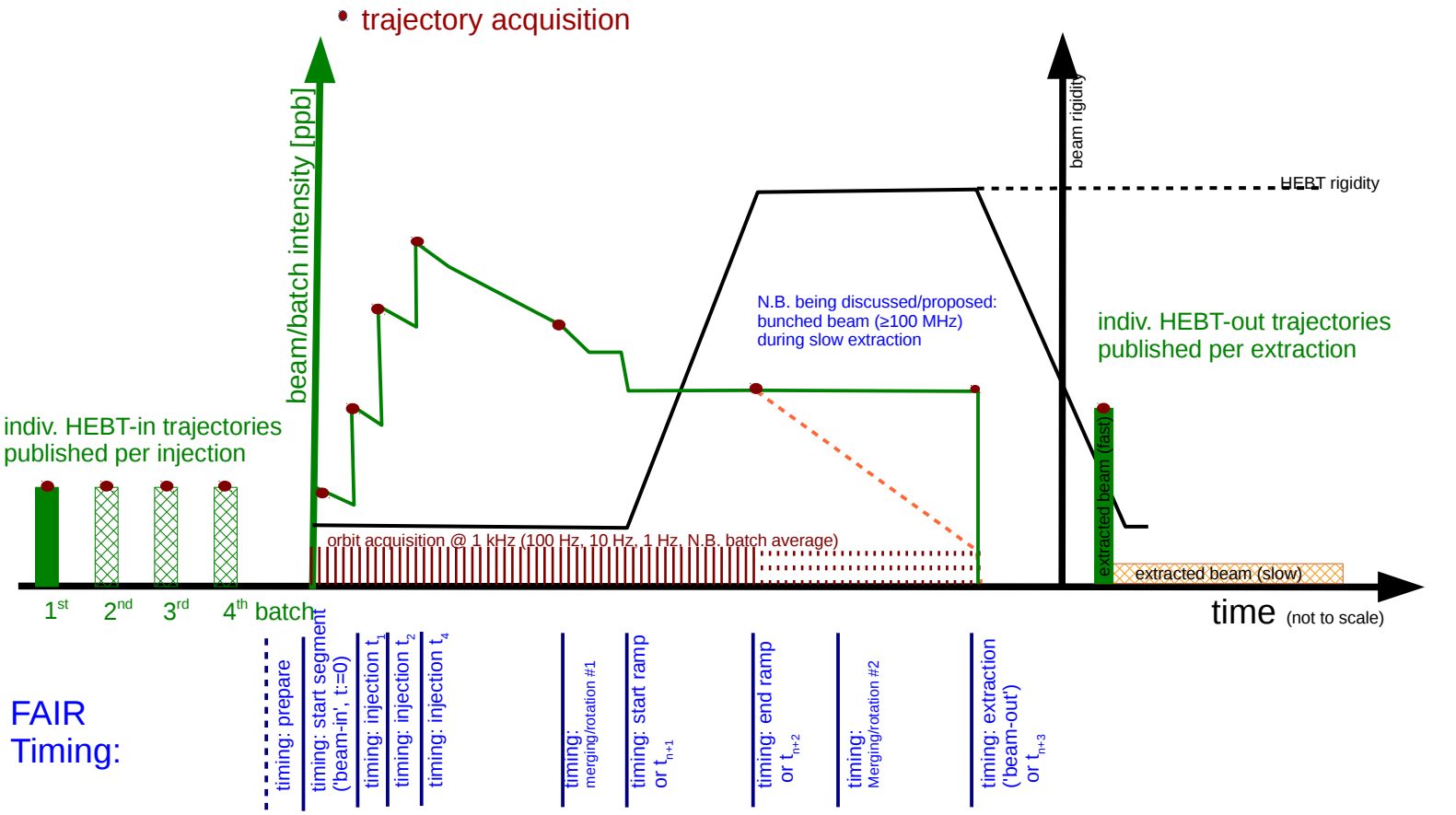

transfer line 1
e.g. SIS18 → HEBT → SIS100
or: SIS18 → HEBT → ESR
or: ESR → HEBT → CRYRING

Circular Machine Cycle
e.g. SIS100, CR, HESR, CRYRING, SIS18, ESR

transfer line 2
e.g. SIS100 → HEBT → $\bar{p}$-target/CR
or. SIS100 → HEBT → CBM

Low-Level Acquisition Modes
A.1) Streaming-mode acquisition I/II

acquisition schematic:

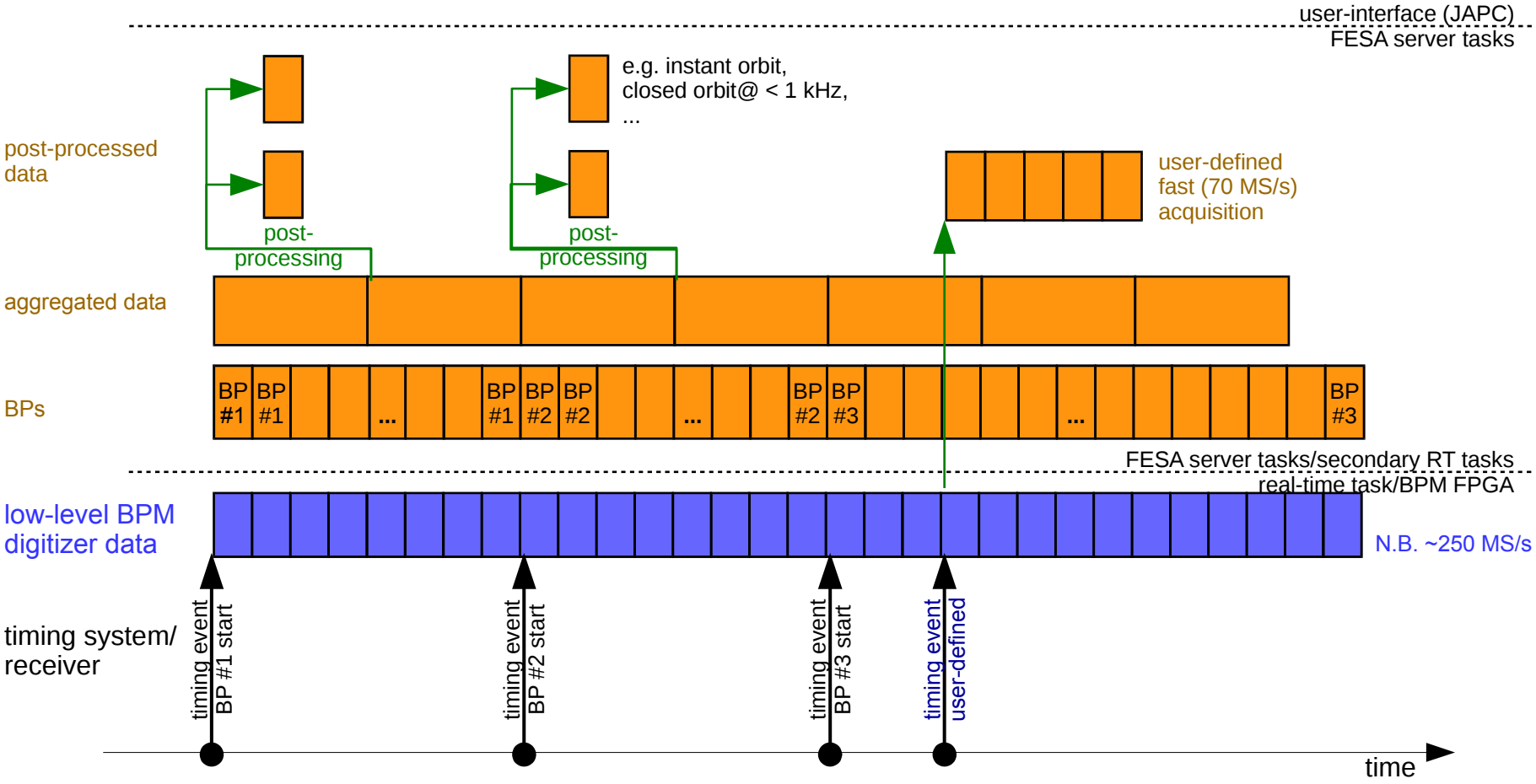

Trajectory/Orbit Acquisitions I/II
Specified FESA Data Streams (Concentrator)

Following modes of acquisition would be expected to be served simultaneously (though some of them could be implemented as down-sampled copies of the higher bandwidth acquisition):

A. Slow-acquisition (FESA property: e.g. 'Orbit') – sub-choices (selected via CMW-filter):

1) **'Sequence'** acquisition between 'beam injection' and 'beam extraction': the closed orbit position averaged and decimated to the rate needed for the given client (e.g. 1 kHz).
   → *property notifies complete trace as a function of time at the end of the sequence (up to 30-60 s)*
2) **'Continuous'** real-time data publication during the cycle (↔ N.B long SIS100 cycles and/or storage rings):
   → *property notifies single measurement at typical update rate around 10-25 Hz*
   - use-case: user-level applications (inj./extr. steering), software-based real-time feedbacks, ...
3) **'Instant'** orbit acquisition: → *property notifies single measurement at pre-defined time delays (ms-scale)*
   - software interlock on injection/extraction orbit deviations (via MASP)

B. Fast turn-by-turn acquisition (FESA property: e.g. 'Trajectory', or combined with above to 'Acquisition'):

1) average batch trajectories in HEBT/HEST (possibly different device)
2) First 1000 turns for 1st, 2nd, … nth injection
   - default & 1st injection: average batch position
   - ≥ 2nd inj.: gated turn signal on newly injected batch
3) Last 3 turns → injection/extraction steering (see bunch-to-bucket transfer scheme)
4) 3 study buffers covering 10k (optionally up to 100k) turns
   - data should be retained for one sequence and can be overwritten in subsequent sequences
   - event time window may overlap with above reduced acquisition (e.g. BCMS & last turn).
5) optionally: bunch-by-bunch data for predefined number of BPMs
   - N.B. large (10s of GB) data volumes

Trajectory/Orbit Acquisitions II/II
Specified FESA Data Streams (Concentrator)

… cont.

C. Post-Mortem (FESA property 'PostMortem'): not finalized yet but provisionally, it can be foreseen that:

1) first circular buffer storing the orbit @ 1 kHz for the last second of beam or full cycle

2) second circular buffer storing the last 1k (10k?) turns.

D. BI-Expert acquisitions

1) “Raw ADC” acquisition. The raw ADC data within the time frame in a single cycle of a certain accelerator and a specific BPM defined via the FESA interface. The same acquisition data format should be used that is used internally by the low-level front-ends.

2) Bunch-by-bunch acquisition. The Bunch-by-bunch data within the time frame, accelerator and BPM defined by client. For bunch-by-bunch the data structure may be similar as for orbit and trajectory data, but should be a different property because of the expected data amount.

3) Tune measurements acquisition. Fourier transformations of the parts of Bunch-by-bunch data at times and within time frames provided by client.

BPM SW Requirements I/II

- All BPM data available from one single source/concentrator
- Two (possibly one) FESA properties for ‘orbit’ & ‘trajectory’ data
  - N.B. 'Orbit' and 'Trajectory' assumed to be based on turn averages
    (ie. no bunch-by-bunch → other property for optics control & MD purposes)
- Expected primary 'Orbit' & 'Trajectory' information:

A) Average position: $\overline{x}(t_i)=[x_0(t_i), x_1(t_i), \ldots, x_i(t_i)]^T$
   - Orbit: fixed 1 kHz rate or user-defined time stamps (adaptive rate)
   - trajectory: always first turn (injection), last turn (extraction), + user-defined timing events

B) Measurement noise/error: $\overline{\sigma}(t_i)=[\sigma_0(t_i), \sigma_1(t_i), \ldots, \sigma_i(t_i)]^T$
   - Error propagation of actual averaging variance and known HW noise (e.g. ADC, amplifier)

C) Relative (qualitative) sum signal Σ = [-1, +1] w.r.t. ADC range
   - allows: cross-checks of ADC range w.r.t. amplifier gain & relative loss localisation

D) BPM statuses (32/64 bit mask)
   - de-selection masks (BI expert, OP), ADC status, timing errors, bunch detection errors, temperature control, range checks, transient errors, etc.

Specified FESA Property Layout I/II

Property	Variable	Description	Data Type	unit	dim1
Aquisition	selectedFilter	CMW subscription filter ↔ requested data mode[6] (enum)	String	[]	
Aquisition	acquiredOk	measurement OK?	1D-array of booleans	[]	N_{BPM}
Aquisition	acquiredOk_dimensions	{N_{BPM}}	1D-array of integers	---	1
Aquisition	acquiredOk_labels	{"device"}	1D-array of Strings	---	1
Aquisition	acquiredOk_dim1_labels	device names of the BPMs	1D-array of Strings	---	N_{BPM}
Aquisition	beamPosition	average beam position	1D-array of floats	[m]	N_{BPM} x 2 x $N_{Samples}$ x $N_{Bunches}$
Aquisition	beamPosition_dimensions	{N_{BPM}, 2, $N_{Samples}$, $N_{Bunches}$}	1D-array of integers	---	4
Aquisition	beamPosition_labels	{"device", "plane", "time", "bunch"}	1D-array of Strings	---	4
Aquisition	beamPosition_dim1_labels	device names of the BPMs	1D-array of Strings	---	N_{BPM}
Aquisition	beamPosition_dim2_labels	{"horizontal", "vertical"}	1D-array of Strings	---	2
Aquisition	beamPosition_dim3_labels	timestamps of the samples[7]	1D-array of long	---	$N_{Samples}$
Aquisition	beamPosition_dim4_labels	bunch identifier [0,9]	1D-array of byte	---	$N_{Bunches}$
Aquisition	referencePosition	reference beam position	1D-array of integers	[m]	N_{BPM} x 2 x $N_{Samples}$
Aquisition	referencePosition_dimensions	{N_{BPM}, 2, $N_{Samples}$}	1D-array of integers	---	3
Aquisition	referencePosition_labels	{"device", "plane", "time"}	1D-array of Strings	---	3
Aquisition	referencePosition_dim1_labels	device names of the BPMs	1D-array of Strings	---	N_{BPM}
Aquisition	referencePosition_dim2_labels	{"horizontal", "vertical"}	1D-array of Strings	---	2
Aquisition	referencePosition_dim3_labels	timestamps of the samples	1D-array of long	---	$N_{Samples}$
Aquisition	beamPositionError	stdev of orbit measurement	1D-array of floats	[m-rms]	N_{BPM} x 2 x $N_{Samples}$ x $N_{Bunches}$
Aquisition	beamPositionError_dimensions	{N_{BPM}, 2, $N_{Samples}$, $N_{Bunches}$}	1D-array of integers	---	4
Aquisition	beamPositionError_labels	{"device", "plane", "time", "bunch"}	1D-array of Strings	---	4
Aquisition	beamPositionError_dim1_labels	device names of the BPMs	1D-array of Strings	---	N_{BPM}
Aquisition	beamPositionError_dim2_labels	{"horizontal", "vertical"}	1D-array of Strings	---	2
Aquisition	beamPositionError_dim3_labels	timestamps of the samples	1D-array of long	---	$N_{Samples}$
Aquisition	beamPositionError_dim4_labels	bunch identifier [0,9]	1D-array of byte	---	$N_{Bunches}$

Aquisition	sumSignal	rel. pick-up sum signal	1D-array of floats	[a.u.]	N_{BPM} x $N_{Samples}$ x $N_{Bunches}$
Aquisition	sumSignal_dimensions	{N_{BPM}, 2, $N_{Samples}$, $N_{Bunches}$}	1D-array of integers	---	3
Aquisition	sumSignal_labels	{"device", "time", "bunch"}	1D-array of Strings	---	3
Aquisition	sumSignal_dim1_labels	device names of the BPMs	1D-array of Strings	---	N_{BPM}
Aquisition	sumSignal_dim2_labels	timestamps of the samples	1D-array of long	---	$N_{Samples}$
Aquisition	sumSignal_dim3_labels	bunch identifier [0,9]	1D-array of byte	---	$N_{Bunches}$
Aquisition	status	Status information of the BPMs, see also description below			
Aquisition	deviceMask	used/selected for steering/measurements: masking only 'flags' data but shall not set e.g. position data to '0'	1D-array of booleans	[]	2 x N_{BPM}
Aquisition	temperature[8]	temperature of AFE, etc.	1D-array of floats	[°C]	N_{BPM}

standardised layout for n-dim. arrays

- permits decoding of *beamPosition (1 dim) → beamPosition[bpmID, plane, measID, bunchID]*
- *facilitates generic tools for filtering and indexing, e.g.*
  - *selection of orbit of all BPMs-vs-Cordinate-'s' @ given time*
  - *orbit selection of given BPM-vs-Time*
  - *...*

Specified FESA Property Layout II/II

exp. data rates: e.g. SIS100 BPMs→ Archiving System

FAIR Archiving Variable Definition & Estimates

(, only known most volume intensive sources)

#Devices	Property/ Group	Variable Name (time-stamp is added per Property/group)	Brief Description	Variable Type	SI unit	#entries dim-1	#entries dim-2 (if n-dim array)	Post-Mortem?	Archiving==PM Data Structure?	Is FESA Device?	Expected Data Rate	Long-term Storage Needed?	Data Reduction Possible?	Comments	Internal: data rate	Internal: [bytes]	Int: bandwidth [bytes/s]	Int: bandwidth [kbytes/s]		
36	Measurement	Current	meas. current	Float (32 bits)	[A]			YES	YES	YES	100 Hz	YES	NO	(12 quadrupole correctors, 12 sextupole correctors, 12 octupoles correctors)	100	4	14400	0		
36	Measurement	RefCurrent	reference current	Float (32 bits)	[A]			YES	YES	YES	100 Hz	YES	NO		100	4	14400	0		
36	Measurement	Voltage	meas. Voltage	Float (32 bits)	[V]			YES	YES	YES	100 Hz	YES	NO		100	4	14400	0		
36	Measurement	RefVoltage	reference voltage	Float (32 bits)	[V]			YES	YES	YES	100 Hz	YES	NO		100	4	14400	0		
36	Measurement	Status	power converter status bit-mask	Integer (32 bits)	[]			YES	YES	YES	100 Hz	YES	NO		100	4	14400	0		
36	Measurement	PCTemperature	power converter temperature	Float (32 bits)	[°C]			NO		YES	0.1 Hz	NO			0.1	4	14.4	0		
36	Measurement	CableTemperature	cable temperature	Float (32 bits)	[°C]			NO		YES	0.1 Hz	NO			0.1	4	14.4	0	Sum:	
36	Measurement	EarthFault	earth fault current	Float (32 bits)	[A]			YES	YES	YES	100 Hz	YES	NO		100	4	14400	0	0.08	[MB/s]
															0	0	0	0		
166	Measurement	Current	meas. current	Float (32 bits)	[A]			YES	YES	YES	100 Hz	YES	NO	(164+2 slow orbit correctors)	100	4	66400	0		
166	Measurement	RefCurrent	reference current	Float (32 bits)	[A]			YES	YES	YES	100 Hz	YES	NO		100	4	66400	0		
166	Measurement	Voltage	meas. Voltage	Float (32 bits)	[V]			YES	YES	YES	100 Hz	YES	NO		100	4	66400	0		
166	Measurement	RefVoltage	reference voltage	Float (32 bits)	[V]			YES	YES	YES	100 Hz	YES	NO		100	4	66400	0		
166	Measurement	Status	power converter status bit-mask	Integer (32 bits)	[]			YES	YES	YES	100 Hz	YES	NO		100	4	66400	0		
166	Measurement	PCTemperature	power converter temperature	Float (32 bits)	[°C]			NO		YES	0.1 Hz	NO			0.1	4	66.4	0		
166	Measurement	CableTemperature	cable temperature	Float (32 bits)	[°C]			NO		YES	0.1 Hz	NO			0.1	4	66.4	0	Sum:	
166	Measurement	EarthFault	earth fault current	Float (32 bits)	[A]			YES	YES	YES	100 Hz	YES	NO		100	4	66400	0	0.38	[MB/s]
															0	0	0	0		
11	Measurement	Current	meas. current	Float (32 bits)	[A]			YES	YES	YES	100 Hz	YES	NO	(1 fast quadrupole, 2 magnetic injection septum, 1 Lambertson septum, 3 magnetic extractio	100	4	4400	0		
11	Measurement	RefCurrent	reference current	Float (32 bits)	[A]			YES	YES	YES	100 Hz	YES	NO	comment rstein: variable lists probably too coarse needs to be detailed by system expert	100	4	4400	0		
11	Measurement	Voltage	meas. Voltage	Float (32 bits)	[V]			YES	YES	YES	100 Hz	YES	NO		100	4	4400	0		
11	Measurement	RefVoltage	reference voltage	Float (32 bits)	[V]			YES	YES	YES	100 Hz	YES	NO		100	4	4400	0		
11	Measurement	Status	power converter status bit-mask	Integer (32 bits)	[]			YES	YES	YES	100 Hz	YES	NO		100	4	4400	0		
11	Measurement	PCTemperature	power converter temperature	Float (32 bits)	[°C]			NO		YES	0.1 Hz	NO			0.1	4	4.4	0		
11	Measurement	CableTemperature	cable temperature	Float (32 bits)	[°C]			NO		YES	0.1 Hz	NO			0.1	4	4.4	0	Sum:	
11	Measurement	EarthFault	earth fault current	Float (32 bits)	[A]			YES	YES	YES	100 Hz	YES	NO		100	4	4400	0	0.03	[MB/s]
															0	0	0	0		
															0	0	0	0		
1	Orbit	Position_H	average beam position H	1D-array of integers (32 bits)	[m]	84	2	YES	YES	YES	100 Hz	YES	YES, if (!BPF)		100	336	33600	0		
1	Orbit	Position_V	average beam position V	1D-array of integers (32 bits)	[m]	84	2	YES	YES	YES	100 Hz	YES	YES, if (!BPF)		100	336	33600	0		
1	Orbit	Ref_Position_H	reference beam position H	1D-array of integers (32 bits)	[m]	84	2	YES	YES	YES	100 Hz	YES	YES, if (!BPF	N.B. reference does compress significantly since it is nearly constant function from one cy	100	336	33600	0		
1	Orbit	Ref_Position_V	reference beam position H	1D-array of integers (32 bits)	[m]	84	2	YES	YES	YES	100 Hz	YES	YES, if (!BPF)		100	336	33600	0		
1	Orbit	StDev_H	stdev of orbit H	1D-array of floats (32 bits)	[m-rms]	84	2	YES	YES	YES	100 Hz	YES	YES, if (!BPF)		100	336	33600	0		
1	Orbit	StDev_V	stdev of orbit V	1D-array of floats (32 bits)	[m-rms]	84	2	YES	YES	YES	100 Hz	YES	YES, if (!BPF)		100	336	33600	0		
1	Orbit	Sum_H	rel. pick-up sum signal H	1D-array of floats (32 bits)	[a.u.]	84	2	YES	YES	YES	100 Hz	YES	YES, if (!BPF)		100	336	33600	0		
1	Orbit	Sum_V	rel. pick-up sum signal V	1D-array of floats (32 bits)	[a.u.]	84	2	YES	YES	YES	100 Hz	YES	YES, if (!BPF)		100	336	33600	0		
1	Orbit	Status_H	status bit-mask H	1D-array of integers (64 bits)	[]	84	2	YES	YES	YES	100 Hz	YES	YES, if (!BPF)		100	672	67200	0		
1	Orbit	Status_V	status bit-mask V	1D-array of integers (64 bits)	[]	84	2	YES	YES	YES	100 Hz	YES	YES, if (!BPF)		100	672	67200	0		
1	Orbit	Mask_H	used/selected for steering/measurement	1D-array of booleans	[]	84	2	YES	YES	YES	100 Hz	YES	YES, if (!BPF)		100	84	8400	0		
1	Orbit	Mask_V	used/selected for steering/measurement	1D-array of booleans	[]	84	2	YES	YES	YES	100 Hz	YES	YES, if (!BPF)		100	84	8400	0		
1	Trajectory	Position_H	Single-pass trajectory H	2D-array of floats (32 bits)	[m]	84	1500	YES	YES	YES	1 Hz	YES	YES, if (!BPF	e.g. First 1000 turns at injection, last 10 turns at extraction + user selected timing (variable)	1	504000	504000	0		
1	Trajectory	Position_V	Single-pass trajectory V	2D-array of floats (32 bits)	[m]	84	1500	YES	YES	YES	1 Hz	YES	YES, if (!BPF)		1	504000	504000	0		
1	Trajectory	StDev_H	Noise-estimate H	2D-array of floats (32 bits)	[m-rms]	84	1500	YES	YES	YES	1 Hz	YES	YES, if (!BPF)		1	504000	504000	0		
1	Trajectory	StDev_V	Noise-estimate V	2D-array of floats (32 bits)	[m-rms]	84	1500	YES	YES	YES	1 Hz	YES	YES, if (!BPF)		1	504000	504000	0		
1	Trajectory	Sum_H	rel. pick-up sum signal H	2D-array of floats (32 bits)	[a.u.]	84	1500	YES	YES	YES	1 Hz	YES	YES, if (!BPF)		1	504000	504000	0		
1	Trajectory	Sum_V	rel. pick-up sum signal V	2D-array of floats (32 bits)	[a.u.]	84	1500	YES	YES	YES	1 Hz	YES	YES, if (!BPF)		1	504000	504000	0		
1	Trajectory	Status_H	status bit-mask H	1D-array of integers (64 bits)	[]	84	1500	YES	YES	YES	1 Hz	YES	YES, if (!BPF)		1	672	672	0		
1	Trajectory	Status_V	status bit-mask V	1D-array of integers (64 bits)	[]	84	1500	YES	YES	YES	1 Hz	YES	YES, if (!BPF)		1	672	672	0		
1	Trajectory	Mask_H	used/selected for steering/measurement	1D-array of booleans	[]	84	1500	YES	YES	YES	1 Hz	YES	YES, if (!BPF)		1	84	84	0		
1	Trajectory	Mask_V	used/selected for steering/measurement	1D-array of booleans	[]	84	1500	YES	YES	YES	1 Hz	YES	YES, if (!BPF)		1	84	84	0	Sum BPMs:	
1	Status	Temperature	temperature of AFE, etc.	1D-array of floats (32 bits)	[°C]	84	10	YES	YES	YES	1 Hz	YES	YES, if (!BPF	note: 1st-dim used to account for temperature of sub-components	1	336	336	0	3.29	[MB/s]

Summary | SIS100

Assumption:

- Single Concentrator handling (/republishing) 84 BPMs @ 100 Hz → 3.3 MB/s
  - N.B. Raw BPM Concentrator Data Rate ~ 32 MB/s (Orbit @ 1 kHz, 10 x 1.5k turn Acq/s)

Additional FESA Properties

- ‘Settings’ – Supply and Settings Interfaces
  - standard BI-data supply from LSA: ionMassNumber, ionAtomicNumber, ionChargeState, kineticEnergy, maxIntensity, harmonicNumber, maxNumberOfBunches, bunchLength, spillLength, numberOfInjections, injectionBatchOffset, injectionBatchLength, revolutionFrequency, timeOfFlight, flightPath, BeamSpotSizeX, BeamSpotSizeY
  - triggers also automatic gain settings
- System status acquisition: HW/SW statuses, calibrations state, etc.
- Masks manually set by client (low-key OP status management):
  - *‘OP permanent’*: device shall not be used for orbit steering or other similar purposes (for a variety of operational reasons)
  - *‘OP temporary’*: device shall temporarily not be used for orbit steering or other similar purposes (for a variety of operational reasons)
  - *‘BI permanent’*: device shall not be used for orbit steering or other similar purposes
  - *‘BI temporary’*: the specific BPM/s is used for tests or concerns on functionality (e.g. used during BI expert diagnostics operation or setup procedures)
- Pre-amplifier Settings and Acquisition Interface (allows manual gain settings override)
- Properties required for gain calibration procedures

Top-Level Calibration Procedure

- Two types of calibration foreseen:
  - Pre-amplifier gain calibration (~ once per day, outlined in detailed specification)
  - Zero-line calibration (between each BPC when there is no beam in the machine)

- Mandatory calibration quality checks prior to applying new coefficients:
  - quantitative comparison of the measured amplifier channel amplitude (including the lab-based calibration factor measurements) with the reference (which is calculated as signal generator waveform amplitude multiplied by the preamplifier gain value).
  - if the deviation exceeds the specified threshold, the calibration should not be applied for the given BPM, and the status notified via the calibration property which amplifier has failed and at which amplification.
  - **important**: even if all calibrations passed successfully, the operator has to manually approve that the new calibration coefficients can be applied. Until then, the last parameters shall be used by the system.
    - N.B. operator may choose to override and provide a custom (constant) gain for given number of BPMs

Summary

- Joint Specification
  - Combines different aspects
  - Realization-independent *and* valid on longer time scales
- Technical solutions for common problems
  - n-dim. arrays and others
- Definition of standard acquisition schemes that are used for other systems as well

Appendix

2016-06-12: Orbit-FB Proof-of-Concept MD

B. Schlei, H. Liebermann, R. Steinhagen

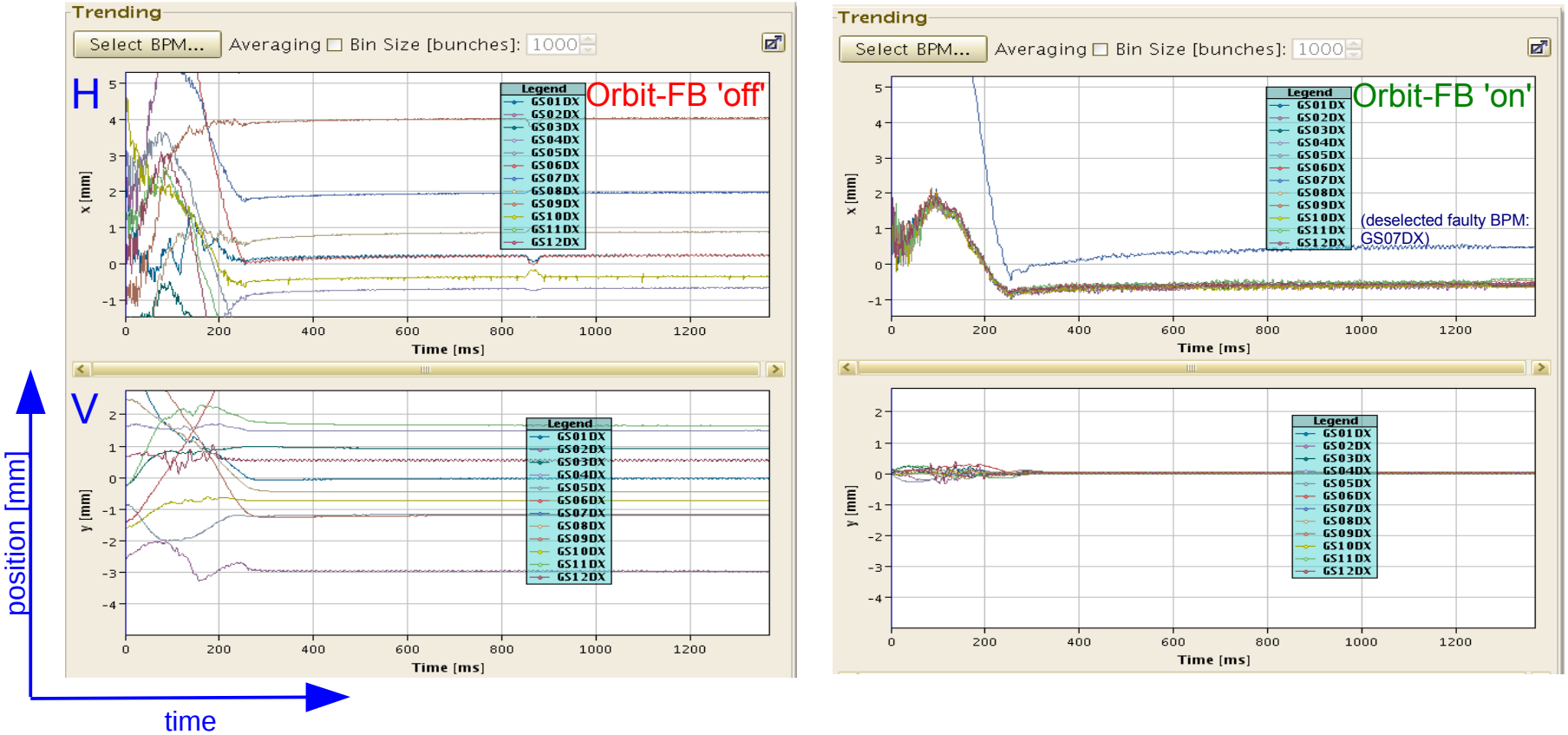

- some workarounds needed, but overall success and results look promising
  - need to follow-up: reliability, performance issues related to CO & BI + detailed integration before being put into regular operation (→ routine operation for 2018 looks feasible)
  - N.B. remaining horizontal oscillation due to uncorreted Δp/p mismatch → radial-loop/Energy-FB

LSA Parameter Hierarchy

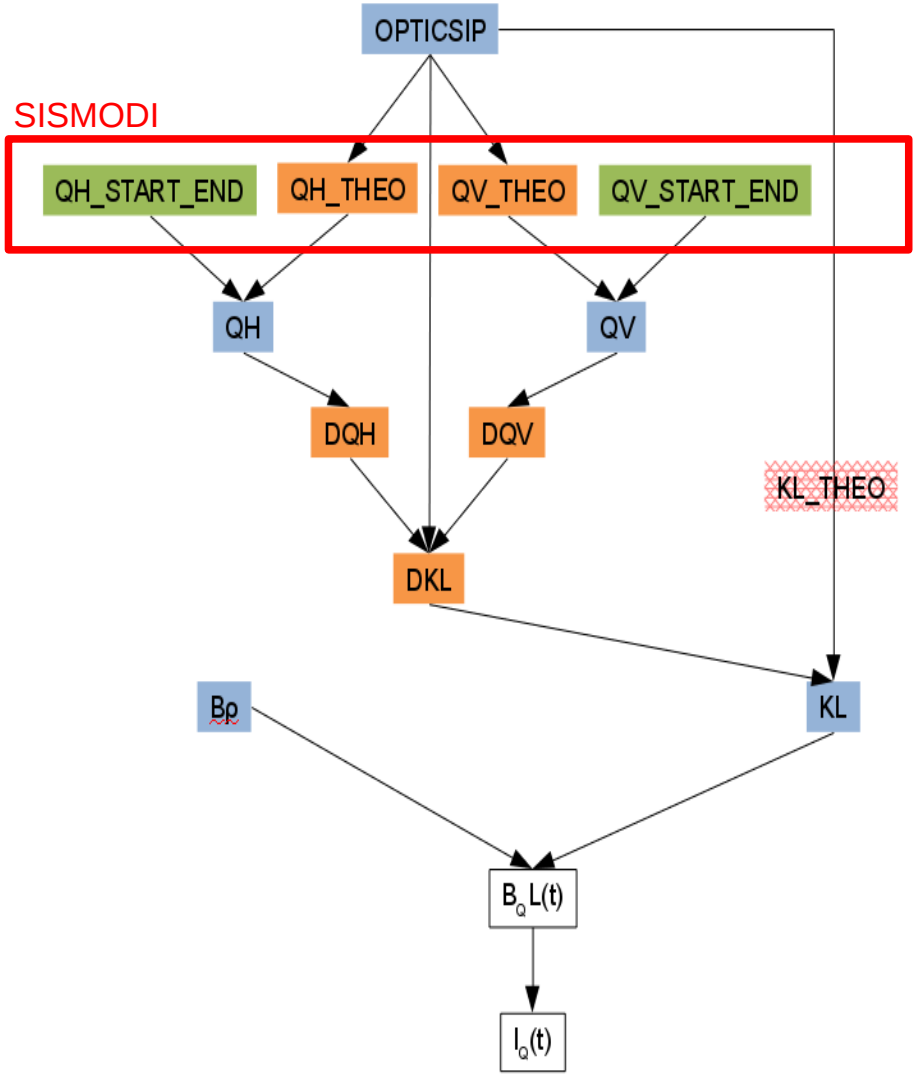

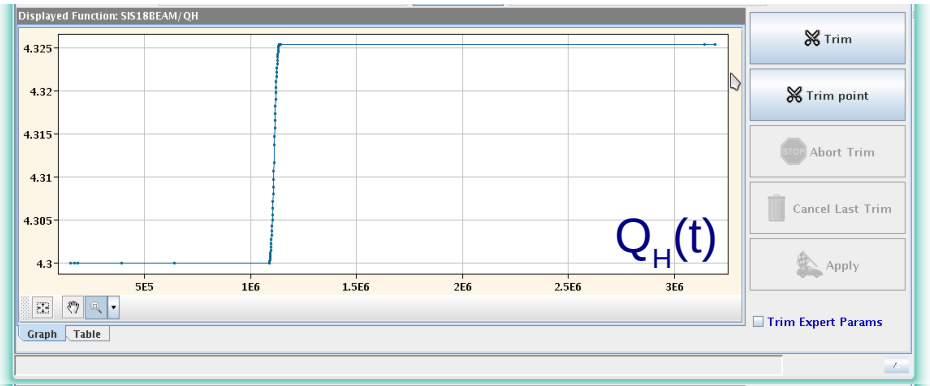

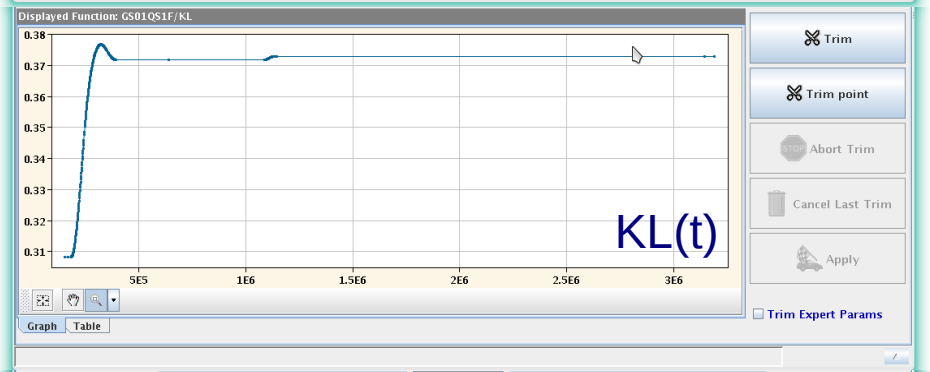

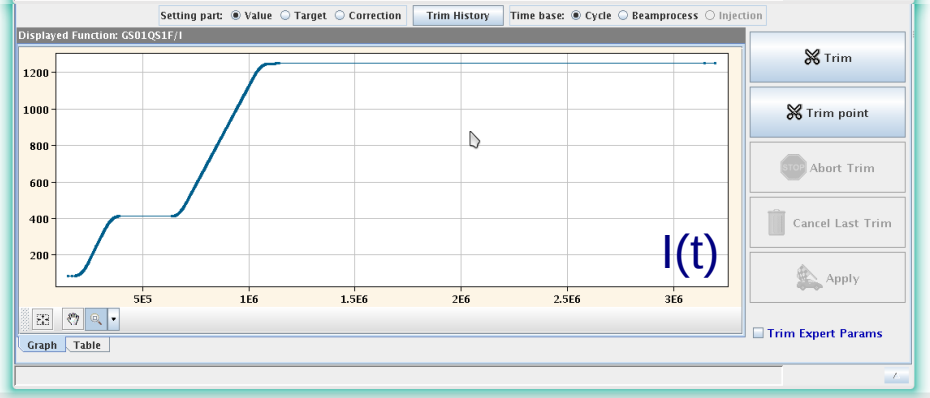

Terminology: Accuracy & Precision
(also ISO 5725)

Good summary: http://en.wikipedia.org/wiki/Accuracy_and_precision

- **Accuracy:** "[..] closeness of measurements [..] to its actual (true) value"
- **Precision** (also: reproducibility or repeatability): "[..] degree to which repeated measurements under unchanged conditions show the same results."
- Example: "Target analogy" and the two extreme cases

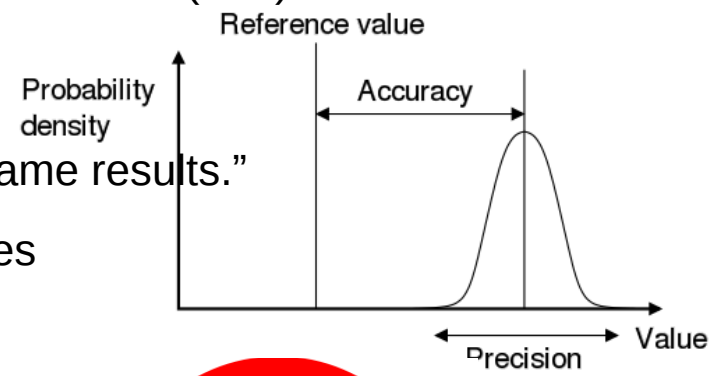

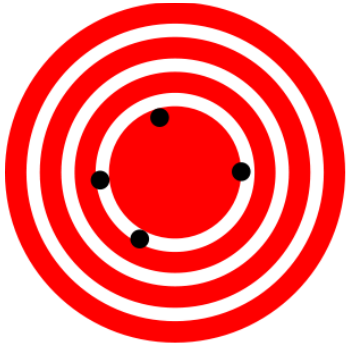

High **accuracy**, but low **precision**

obtained through beam-based alignment

High **precision**, but low **accuracy**

we need this from the BPMs

- **Resolution**: smallest change that produces a response in the measurement