Integration Specification for the Digitization of Analog Signals

Ralph J. Steinhagen

with input from: R. Bär, J. Fitzek, D. Ondreka

Digitization of Analog Signals at FAIR and SIS18 in '18 – Main Paradigms

- traditional/old concept
  (underlying assumption: scopes/digitizers are expensive, RF switches are cheap)

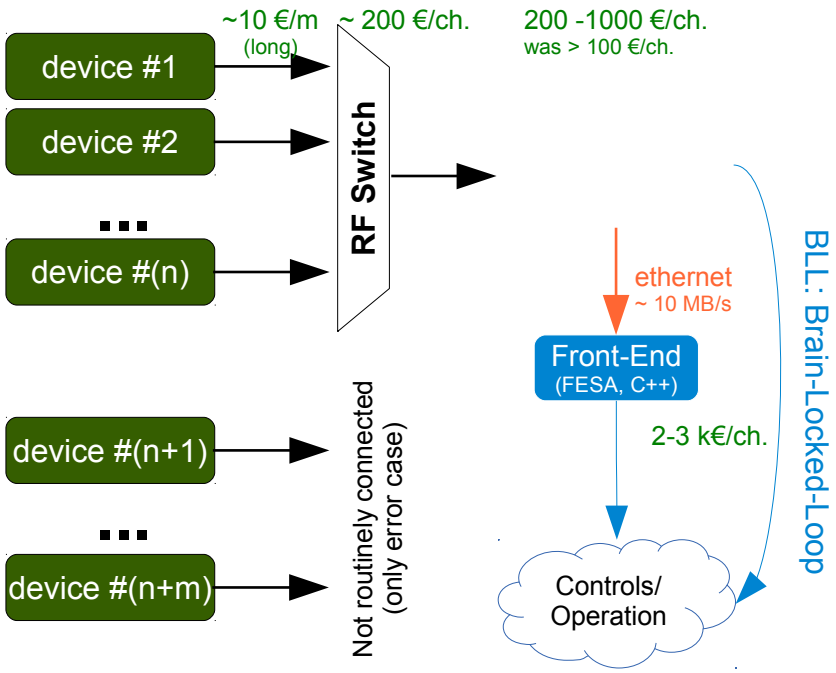

on-demand measurement
(selected signals, error-case, …)

con:
- high-reconfiguration overhead (manual)
- limited test-coverage, trending

Digitization of Analog Signals at FAIR and SIS18 in '18 – Main Paradigms

- traditional/old concept
  (underlying assumption: scopes/digitizers are expensive, RF switches are cheap)

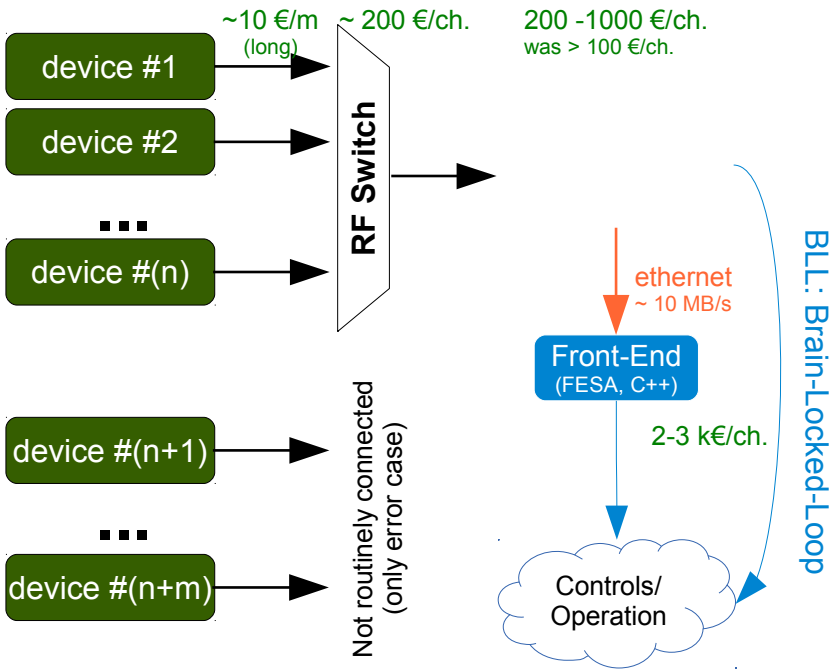

on-demand measurement
(selected signals, error-case, …)

con:
- high-reconfiguration overhead (manual)
- limited test-coverage, trending

- targeted concept
  (underlying assumption: scopes/digitizers are cheap, RF switches are expensive)

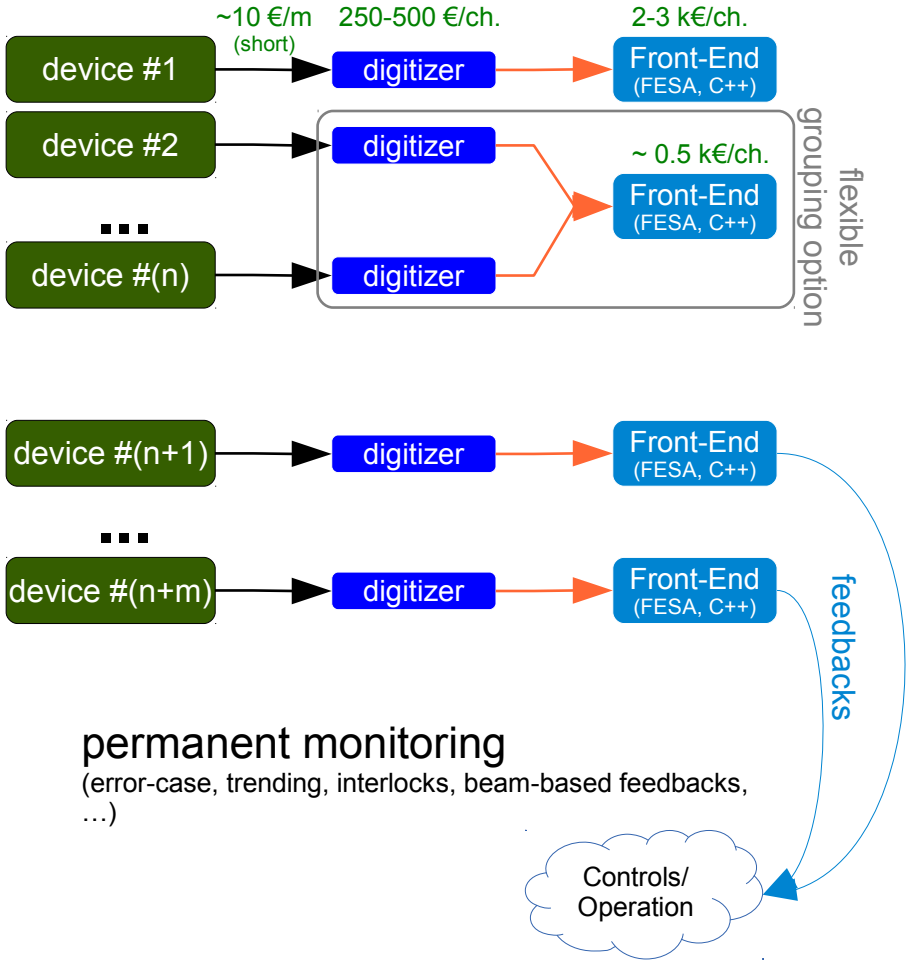

permanent monitoring
(error-case, trending, interlocks, beam-based feedbacks, …)

Digitizer Integration Goals

- Primary goals
  - generic abstraction of the vendor-specific digitizer software interfaces
  - <u>limited</u> range of generic data post-processing on the acquired data
  - control system integration by providing standardised FESA interface

Digitizer Integration Goals

- Primary goals
  - generic abstraction of the vendor-specific digitizer software interfaces
  - limited range of generic data post-processing on the acquired data
  - control system integration by providing standardised FESA interface

- Secondary goals
  - simplify further extensions, compactness, readability, re-usability, testability, and maintainability of the FESA implementation

Digitizer Integration Goals

- Primary goals
  - generic abstraction of the vendor-specific digitizer software interfaces
  - limited range of generic data post-processing on the acquired data
  - control system integration by providing standardised FESA interface

- Secondary goals
  - simplify further extensions, compactness, readability, re-usability, testability, and maintainability of the FESA implementation
  - Use of open-source signal processing and data fitting libraries
    - GNU-Radio – frame-work: www.gnuradio.org
    - ROOT – frame-work: https://root.cern.ch/

Digitization of Analog Signals at FAIR and SIS18 in '18
Detailed Integration Specification → in-kind contract

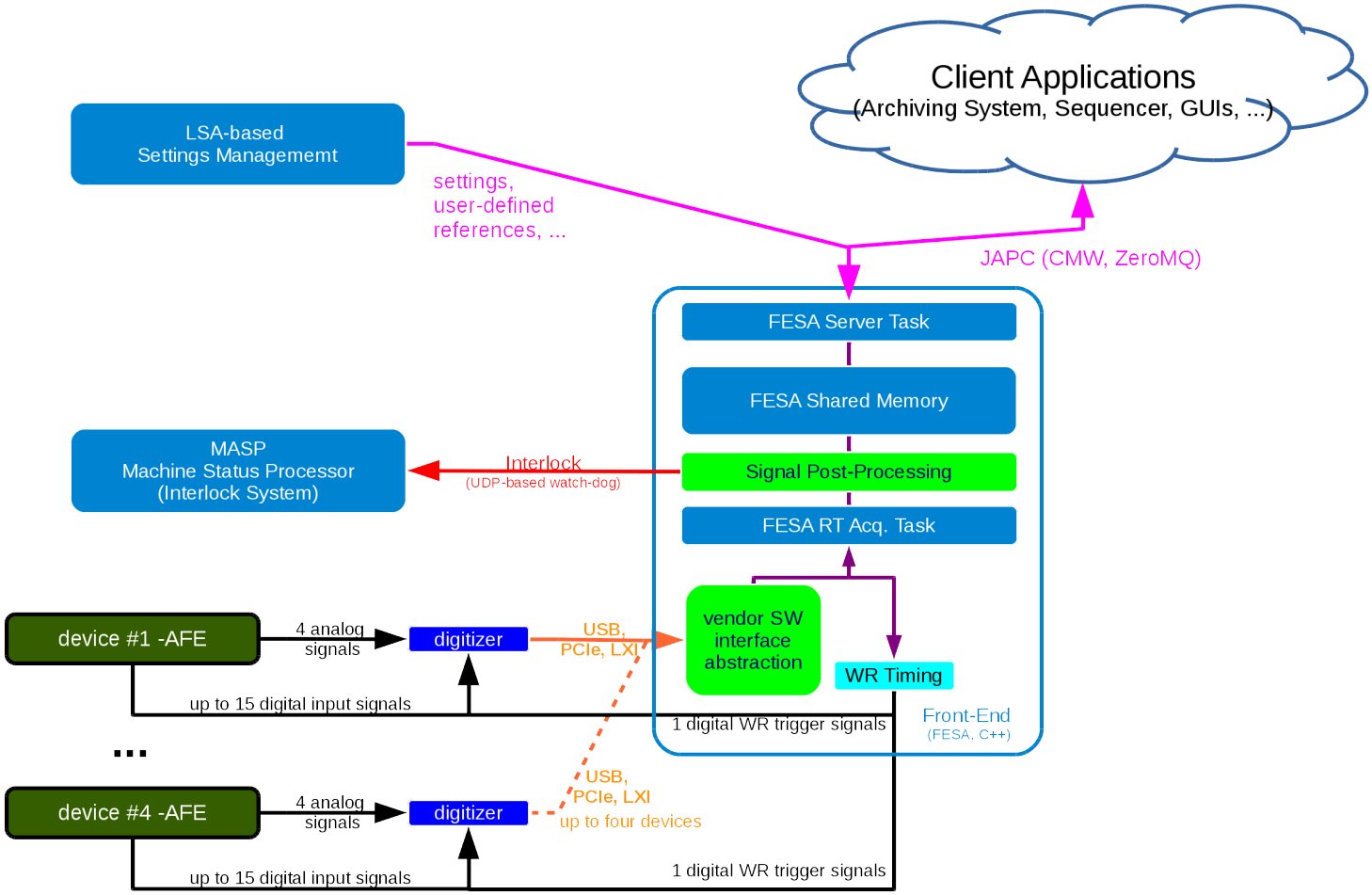

Digitization of Analog Signals at FAIR and SIS18 in '18
Detailed Integration Specification → in-kind contract

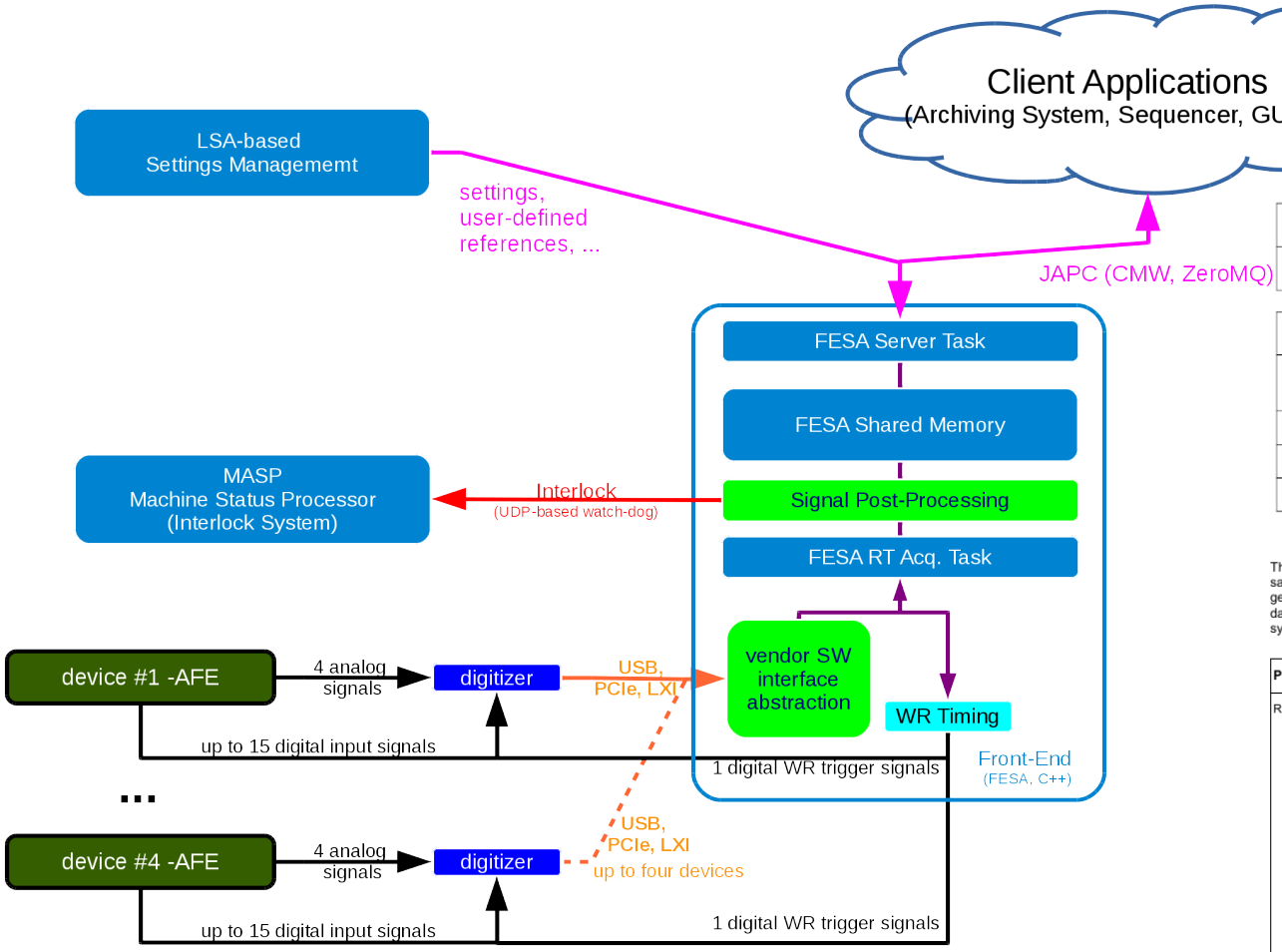

Quality Management	Document Type:	Document Number: F-DS-C-XXe	Date: 2017-06-27
FAIR	**Detailed Specification**	Template Number: Q-FO-QM-0005	Page 1 of 25

Document Title:	**On the Digitization of Analog Signals in the FAIR Accelerator Complex**
Description:	Detailed specification for the integration of time-domain digitizers with analog bandwidths and sampling frequencies ranging from a few MHz to hundreds of MHz into the accelerator control system
Division/Organization:	FAIR
Field of application:	FAIR Project, existing GSI accelerator facility
Version	V 0.2

Abstract

This document describes the integration of time-domain digitizers with analog bandwidths and sampling frequencies ranging from a few MHz to hundreds of MHz. The primary aim is to provide a generic abstraction of the vendor-specific digitizer software interfaces, a limited range of generic data post-processing on the acquired data, and integration of these devices into the FAIR control systems by providing FESA standardised software interfaces.

Prepared by:	Checked by:	Approved by:
R. Steinhagen	FAIR-C2WG-ALL (e-group) R. Bär (CO) A. Bloch-Späth (OP) H. Bräuning (BI) S. Heymell (CO) T. Hoffmann (BI) S. Jülicher (CO) C. Omet (SIS-100 MP) D. Ondreka (SYS) V. Rapp (CO) H. Reeg (BI) A. Reiter (BI) P. Schütt (OP) M. Schwickert (BI) I. Lehmann (Exp. Link-Person) D. Severin (Exp. Link-Person)	R. Bär (Controls) M. Schwickert (BI) R. Steinhagen (FAIR Comm. & Control PL)

General Signal-Flow Scheme I/II

N.B. GNU-Radio inspired

General Signal-Flow Scheme I/II

N.B. GNU-Radio inspired

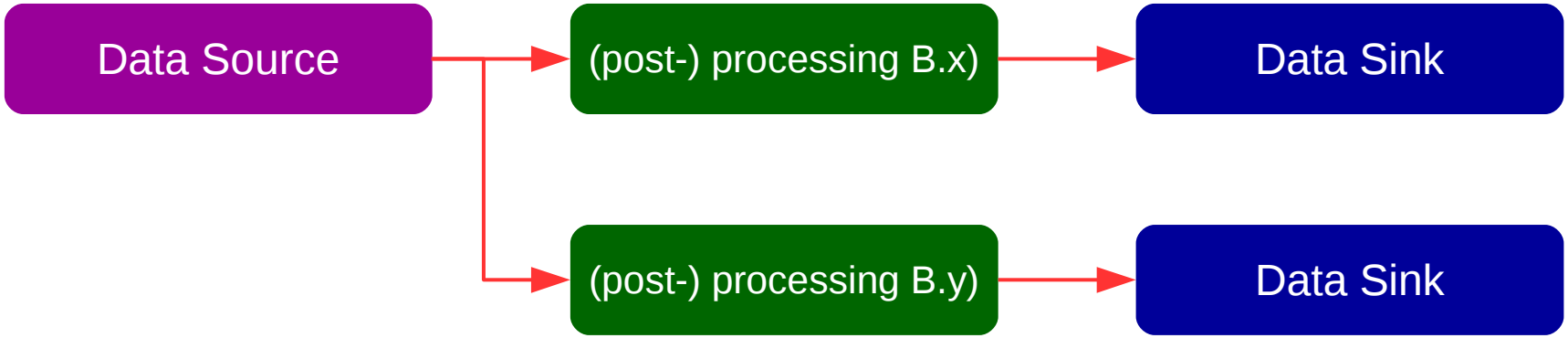

General Signal-Flow Scheme I/II

N.B. GNU-Radio inspired

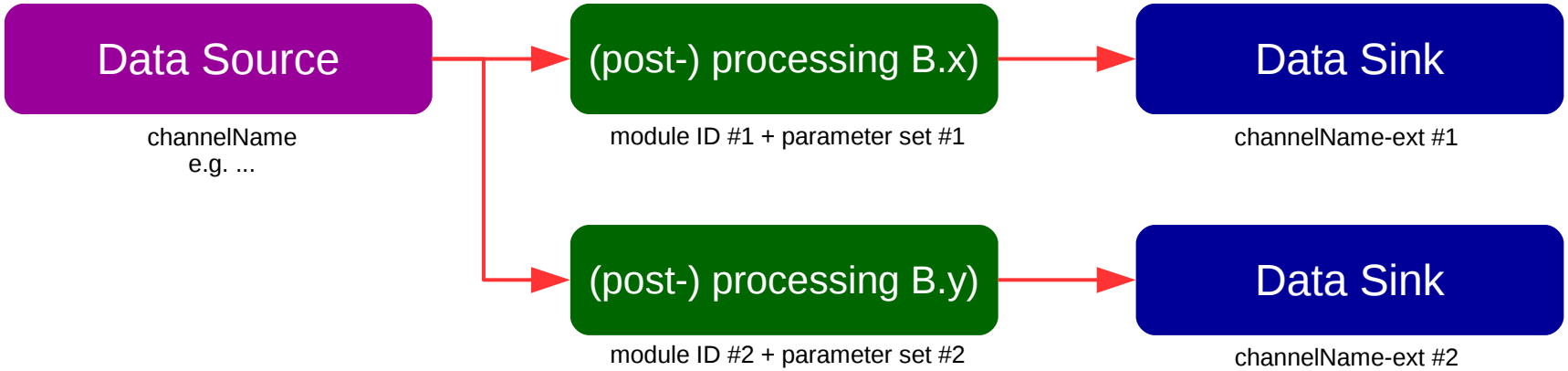

General Signal-Flow Scheme I/II

N.B. GNU-Radio inspired

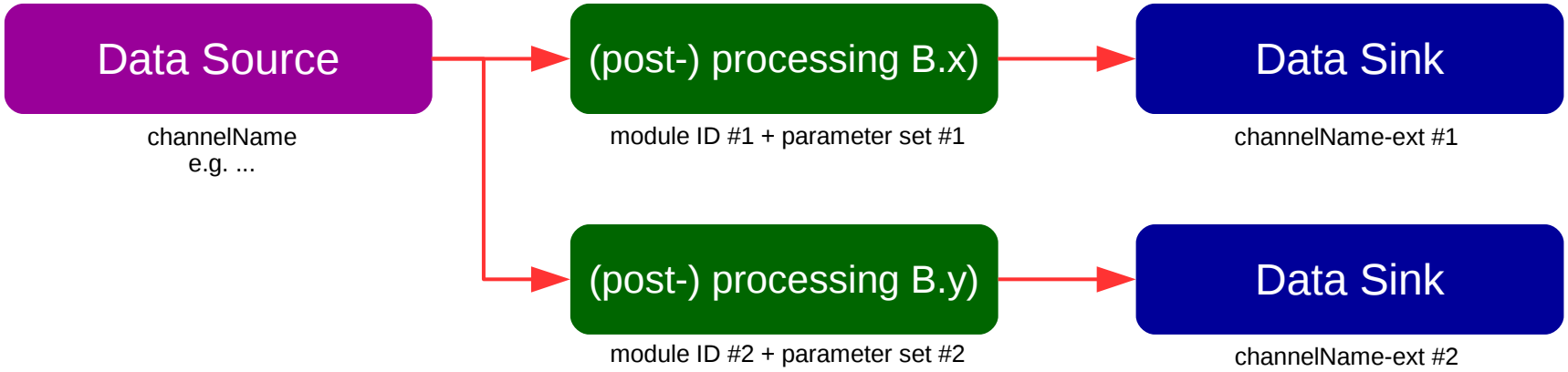

- Scheme can be further cascaded and combined with other modules
  - based on GNURadio‘s signal-flow concept https://www.gnuradio.org/
    - N.B. there are conceptually also other similar other projects: e.g. ADS, QUCS, Spice, LabVIEW … but with a different non-real-time (RF) signal processing

General Signal-Flow
N.B. GNU-Radio inspired

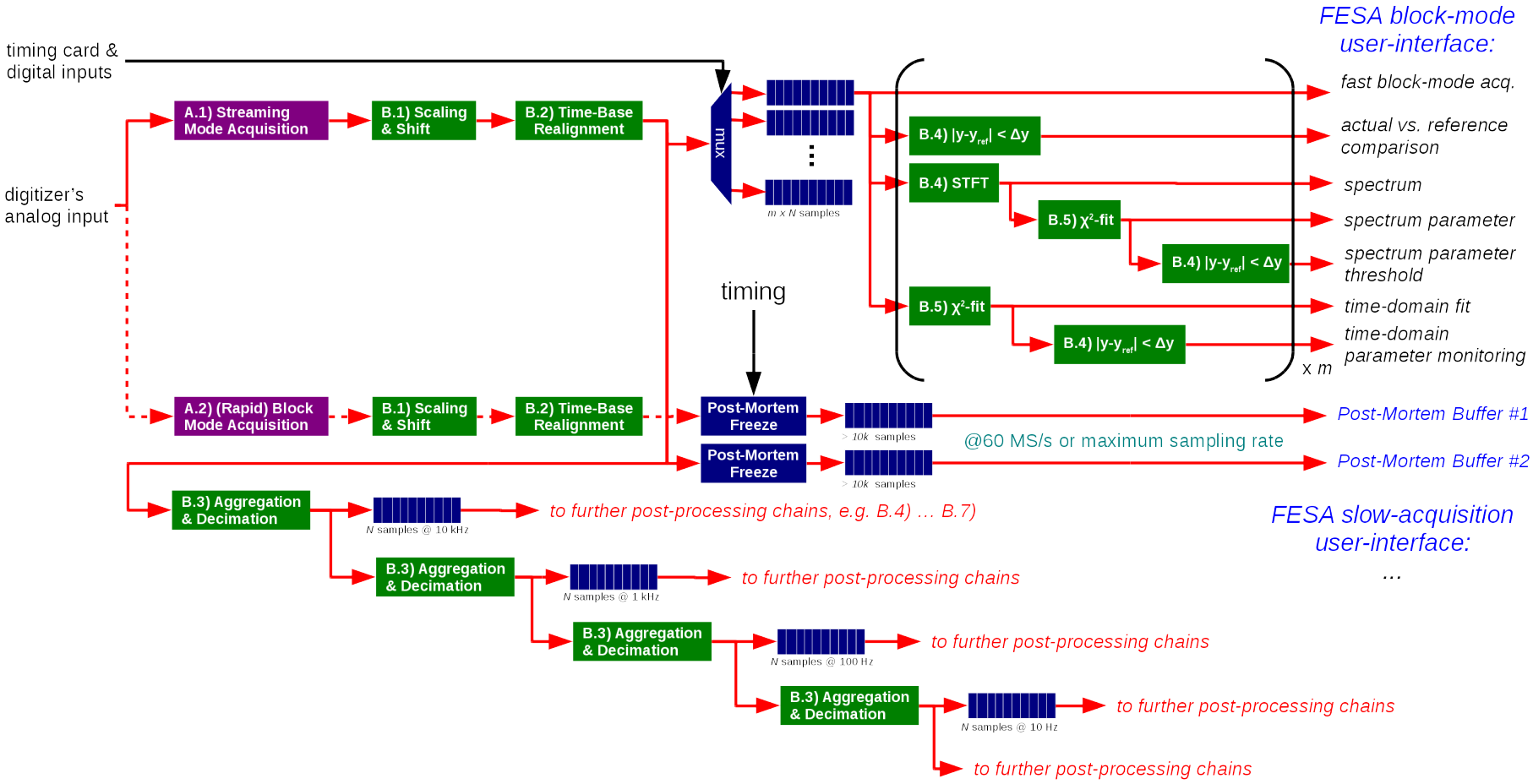

General Signal-Flow
N.B. GNU-Radio inspired

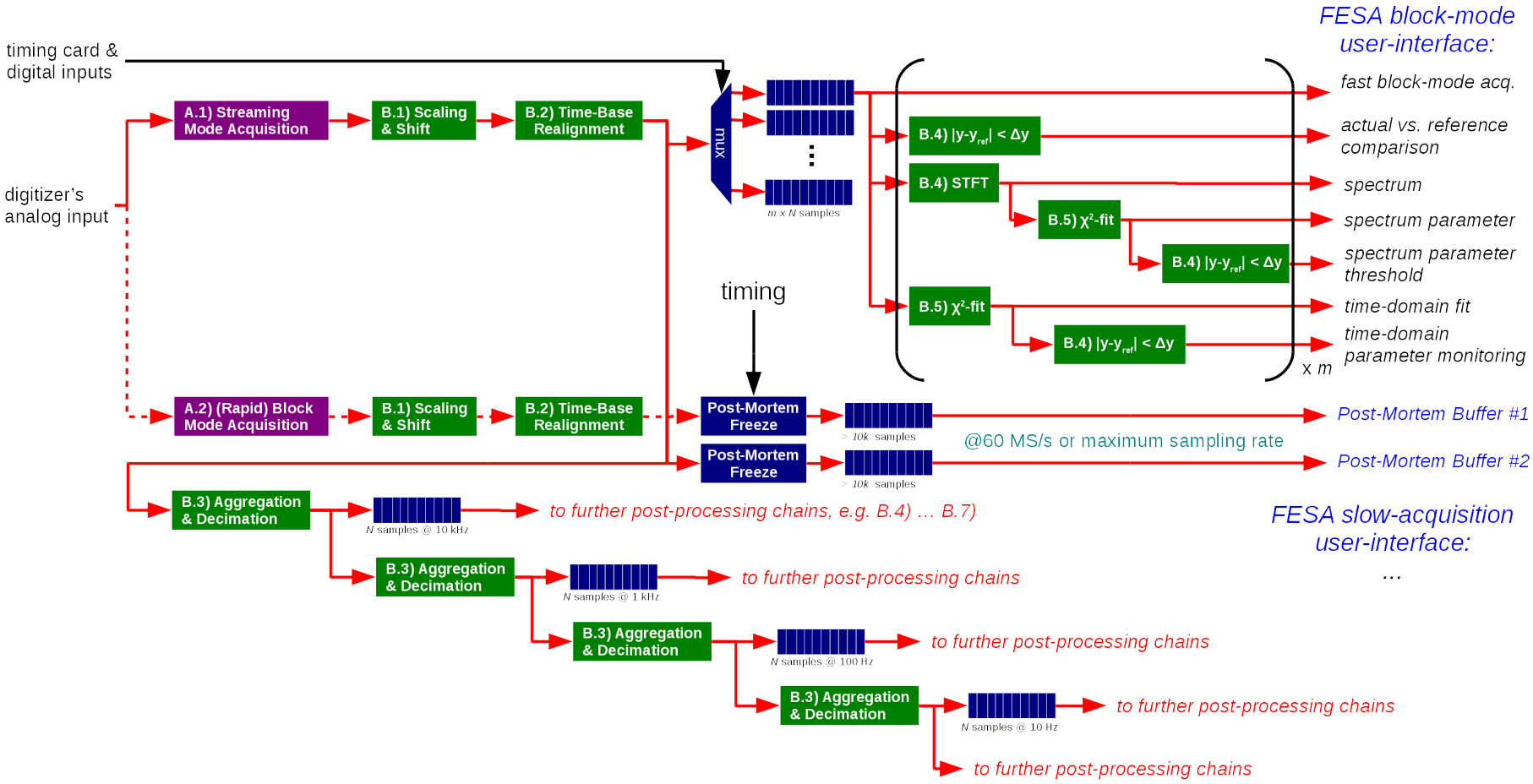

signal flow-chart defined during device instantiation/start-up (tbd.)

From the Draft-Specification

.../b$group/1_FAIRGSI$docu/1_Machines/2.14_Common_Systems/
2.14.17_Commissioning_Control/2.14.17.1_FC2WG/Specifications/

- Two data acquisition modes:
  - A.1) Streaming-mode acquisition
  - A.2) (Rapid) block-mode acquisition
- Limited set of post-processing modules:
  - B.1) raw-measurement scaling and offset shift
  - B.2) time-base re-alignment (lag & extr. event offset compensation)
  - B.3) data aggregation and decimation (typ. to kHz → Hz)
  - B.4) real-time Short-time Fourier Transform (STFT)
  - B.5) amplitude, phase and frequency detection (I-Q demodulation)
  - B.6) χ^2-type fitting and basic peak detection
  - B.7) actual versus reference comparison → interlock

Low-Level Acquisition Modes

A.1) Streaming-mode acquisition I/II

acquisition schematic:

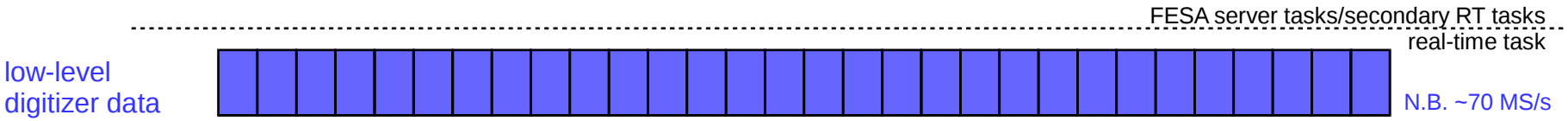

Low-Level Acquisition Modes

A.1) Streaming-mode acquisition I/II

acquisition schematic:

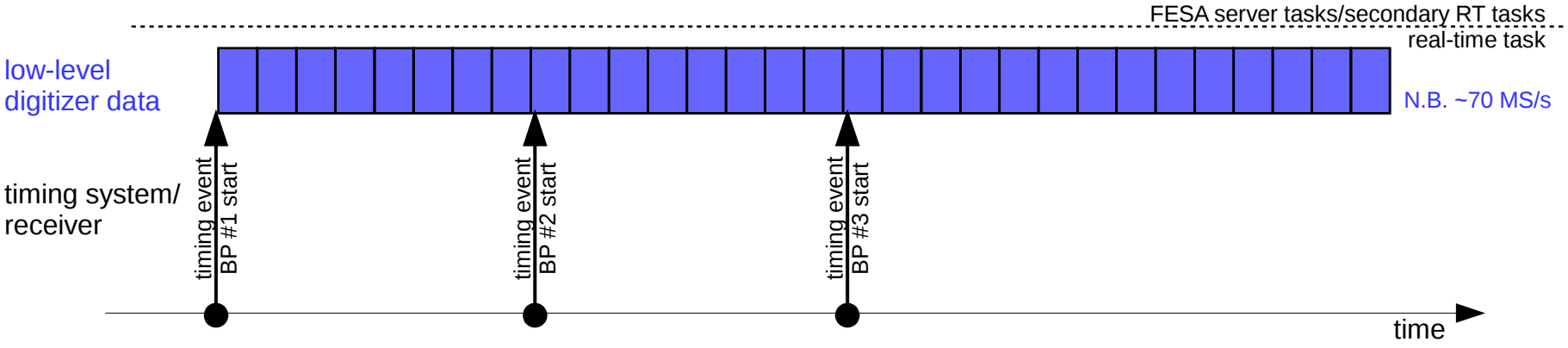

Low-Level Acquisition Modes

A.1) Streaming-mode acquisition I/II

acquisition schematic:

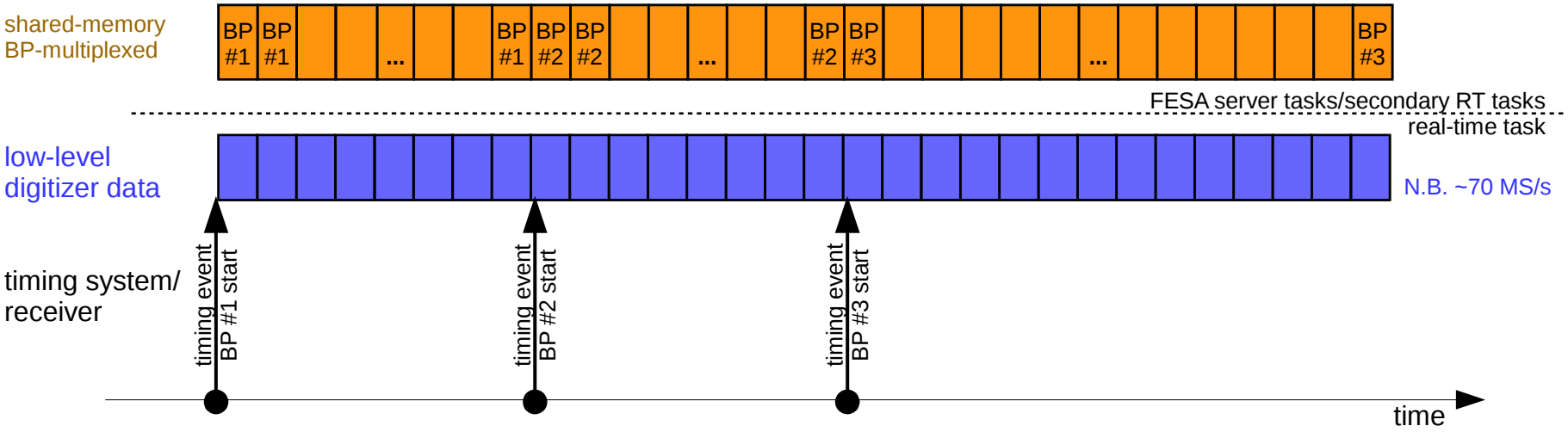

Low-Level Acquisition Modes

A.1) Streaming-mode acquisition I/II

acquisition schematic:

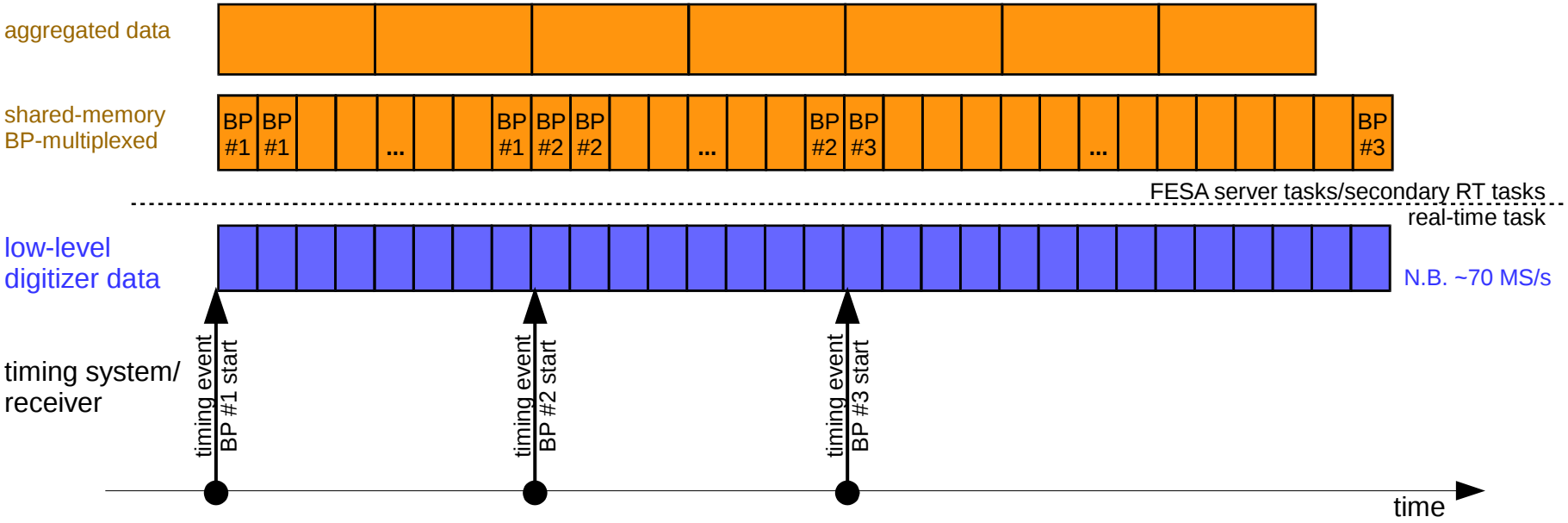

Low-Level Acquisition Modes

A.1) Streaming-mode acquisition I/II

acquisition schematic:

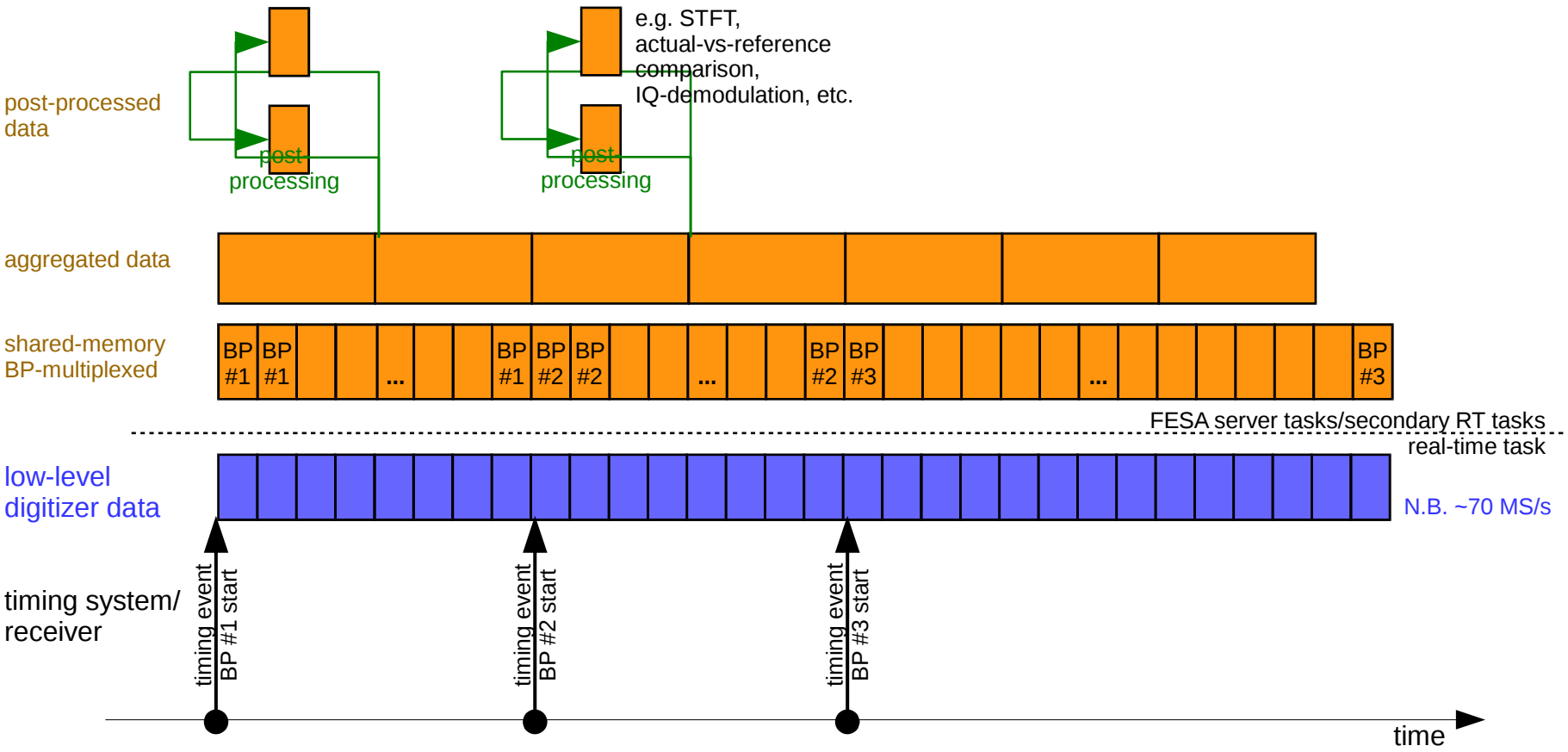

Low-Level Acquisition Modes

A.1) Streaming-mode acquisition I/II

acquisition schematic:

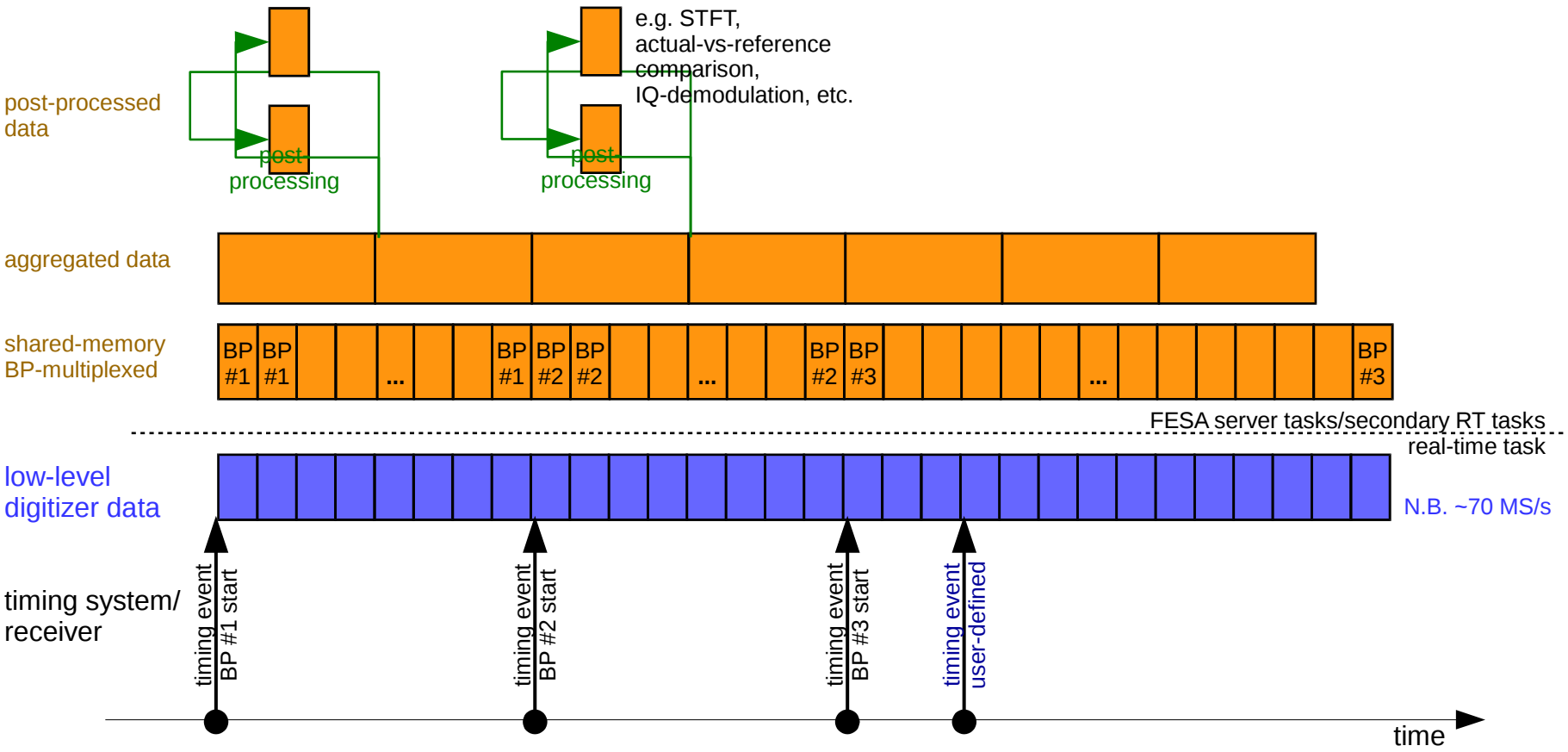

Low-Level Acquisition Modes

A.1) Streaming-mode acquisition I/II

acquisition schematic:

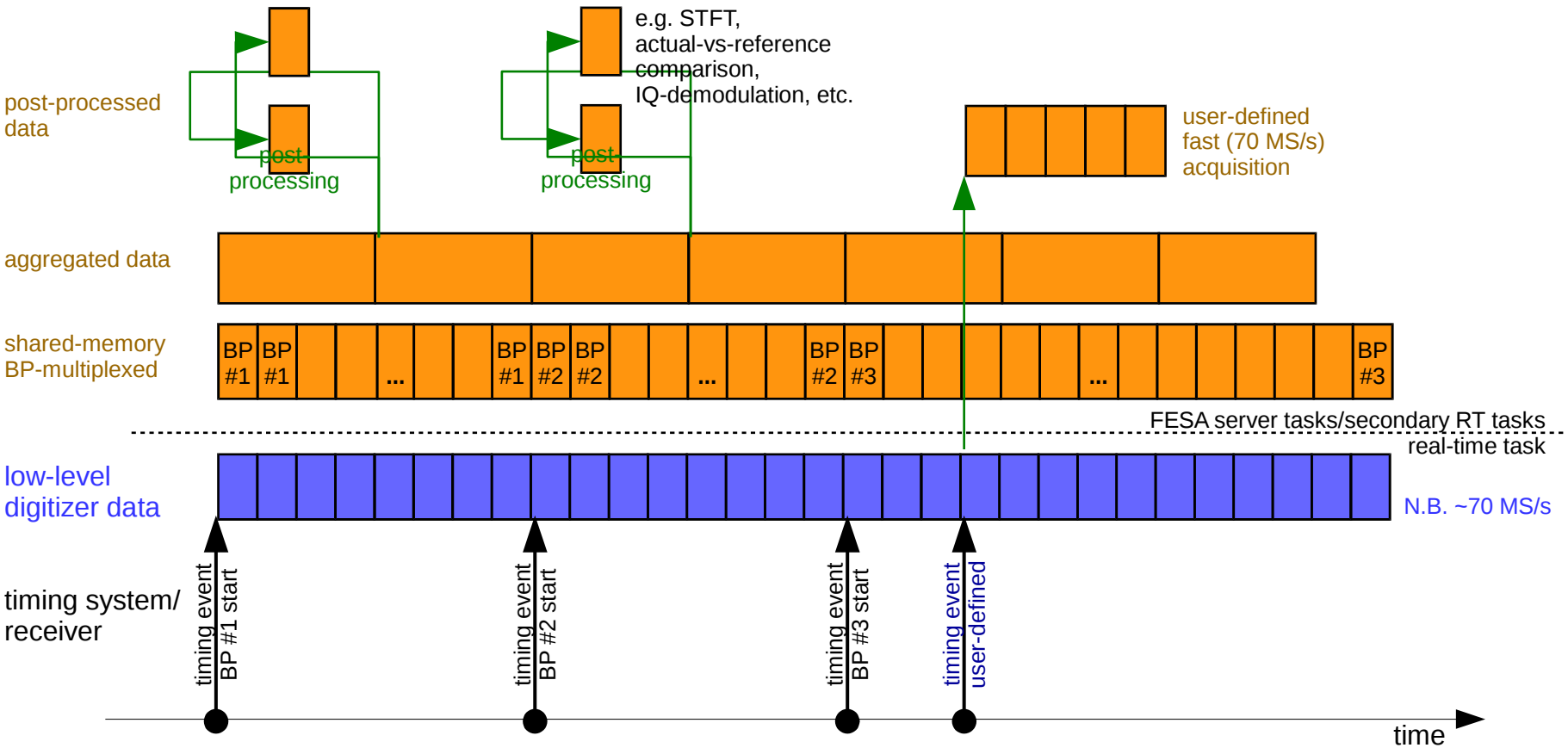

Low-Level Acquisition Modes

A.1) Streaming-mode acquisition I/II

acquisition schematic:

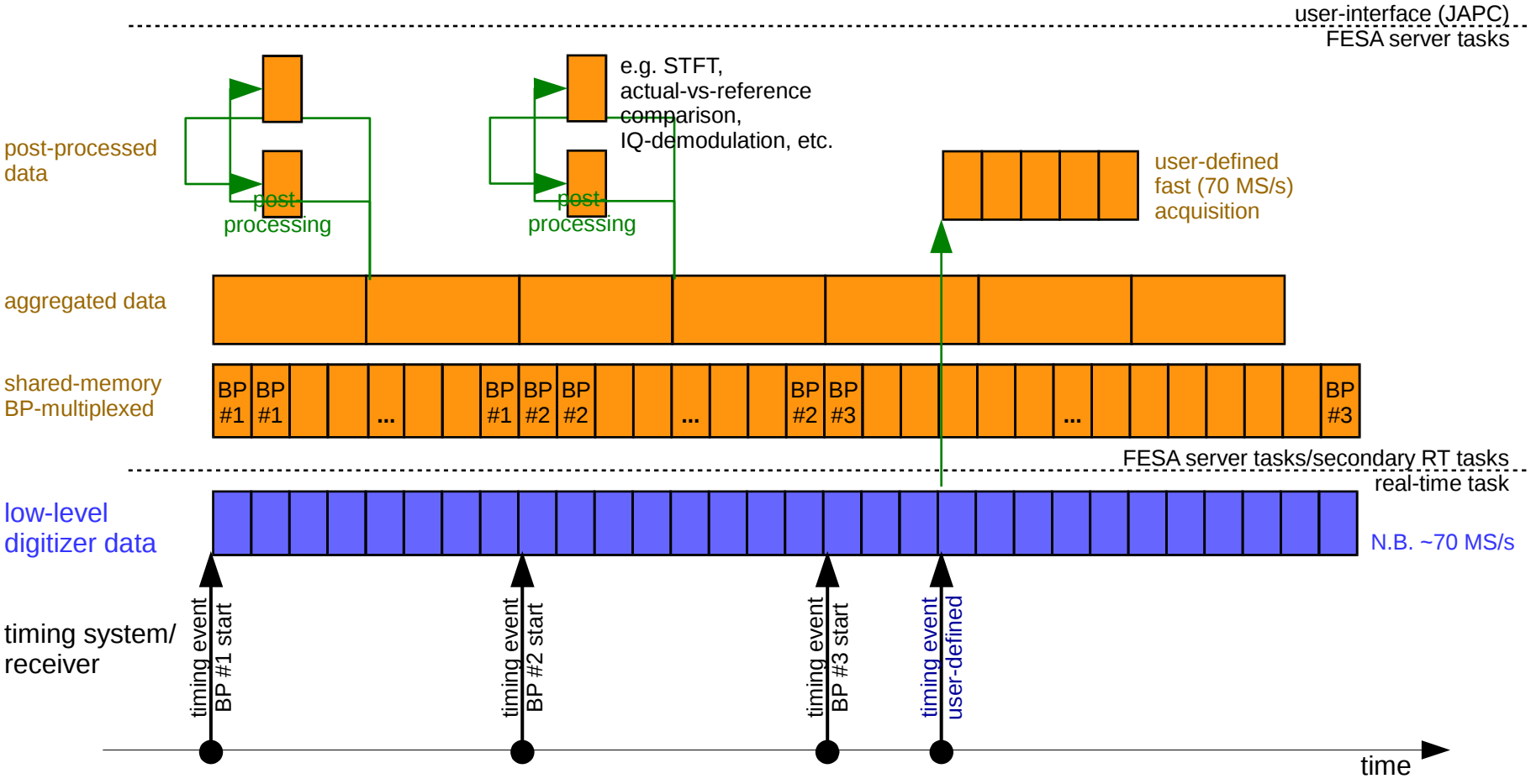

Low-Level Acquisition Modes

A.1) Streaming-mode acquisition II/II

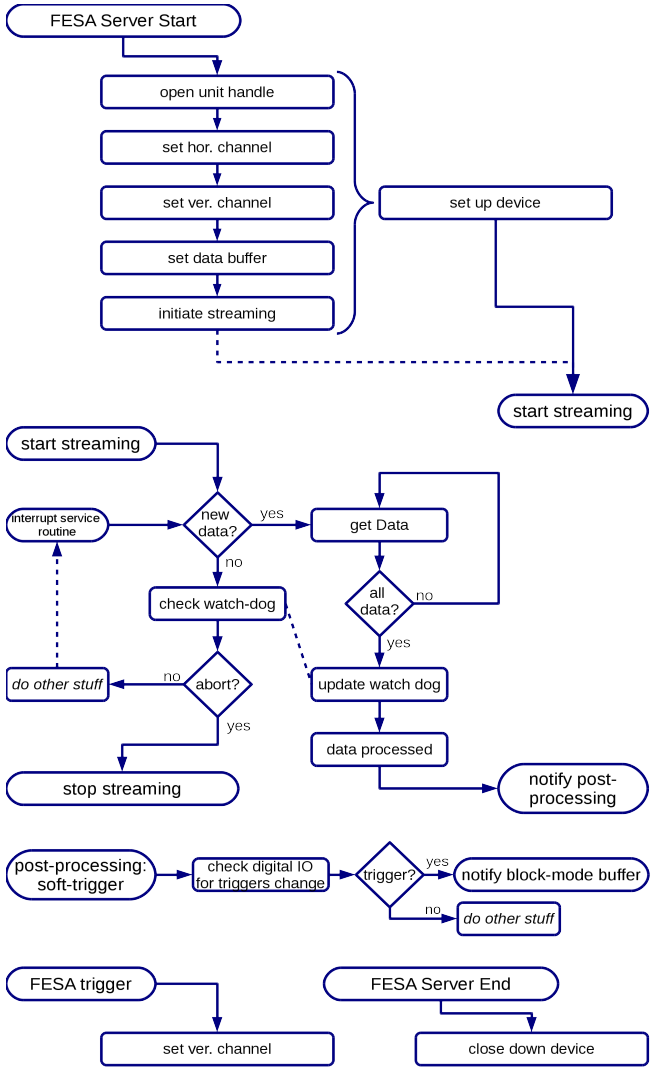

Low-Level Acquisition Modes

A.2) (Rapid) block-mode acquisition I/II

acquisition schematic:

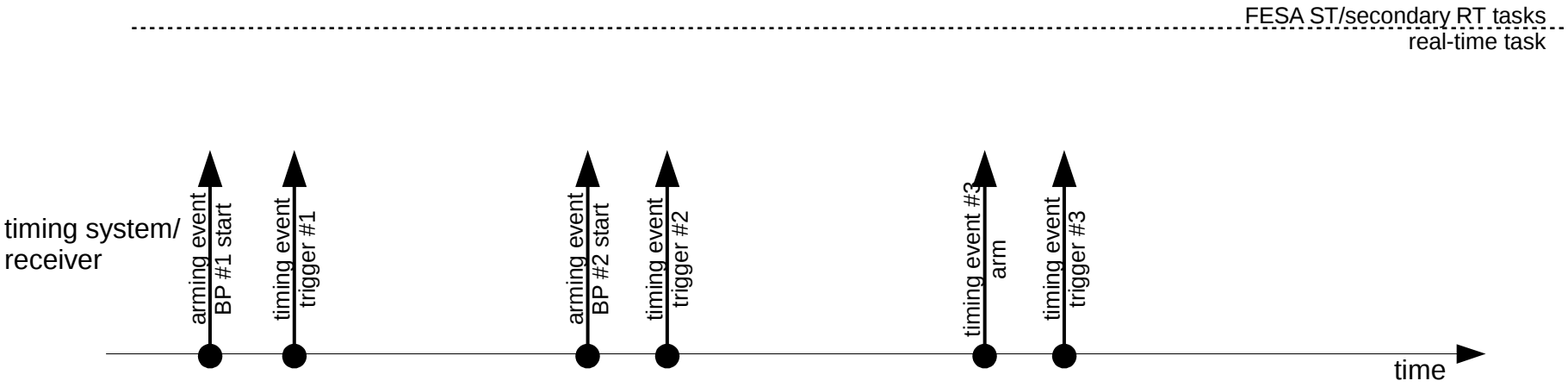

Low-Level Acquisition Modes

A.2) (Rapid) block-mode acquisition I/II

acquisition schematic:

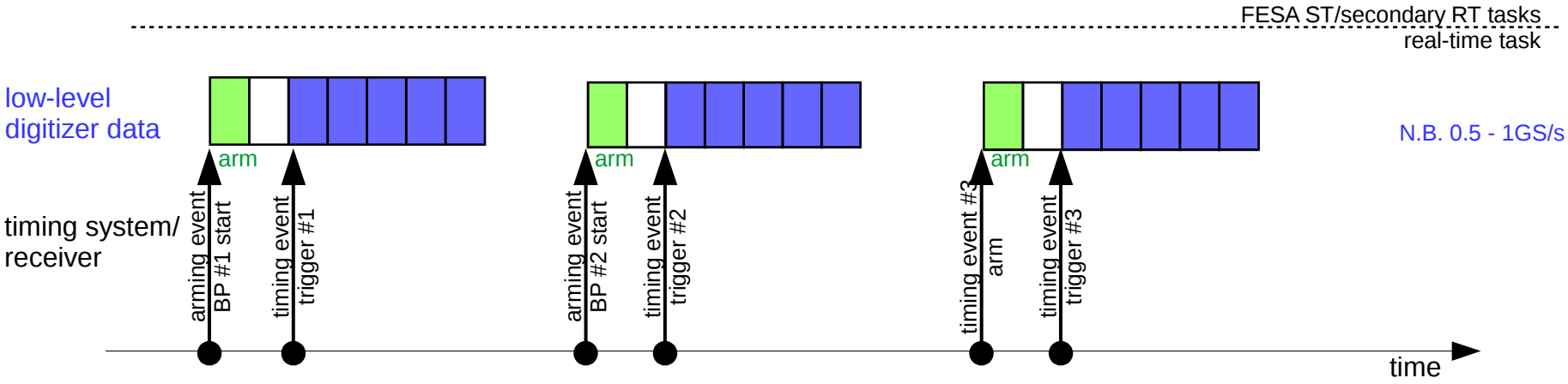

Low-Level Acquisition Modes

A.2) (Rapid) block-mode acquisition I/II

acquisition schematic:

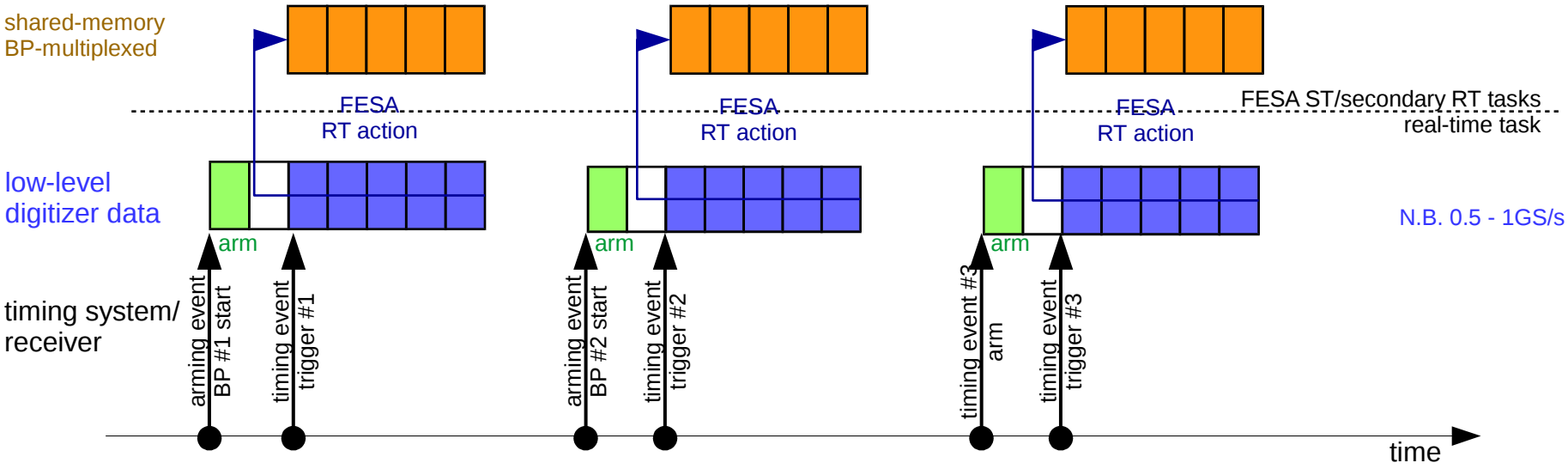

Low-Level Acquisition Modes

A.2) (Rapid) block-mode acquisition I/II

acquisition schematic:

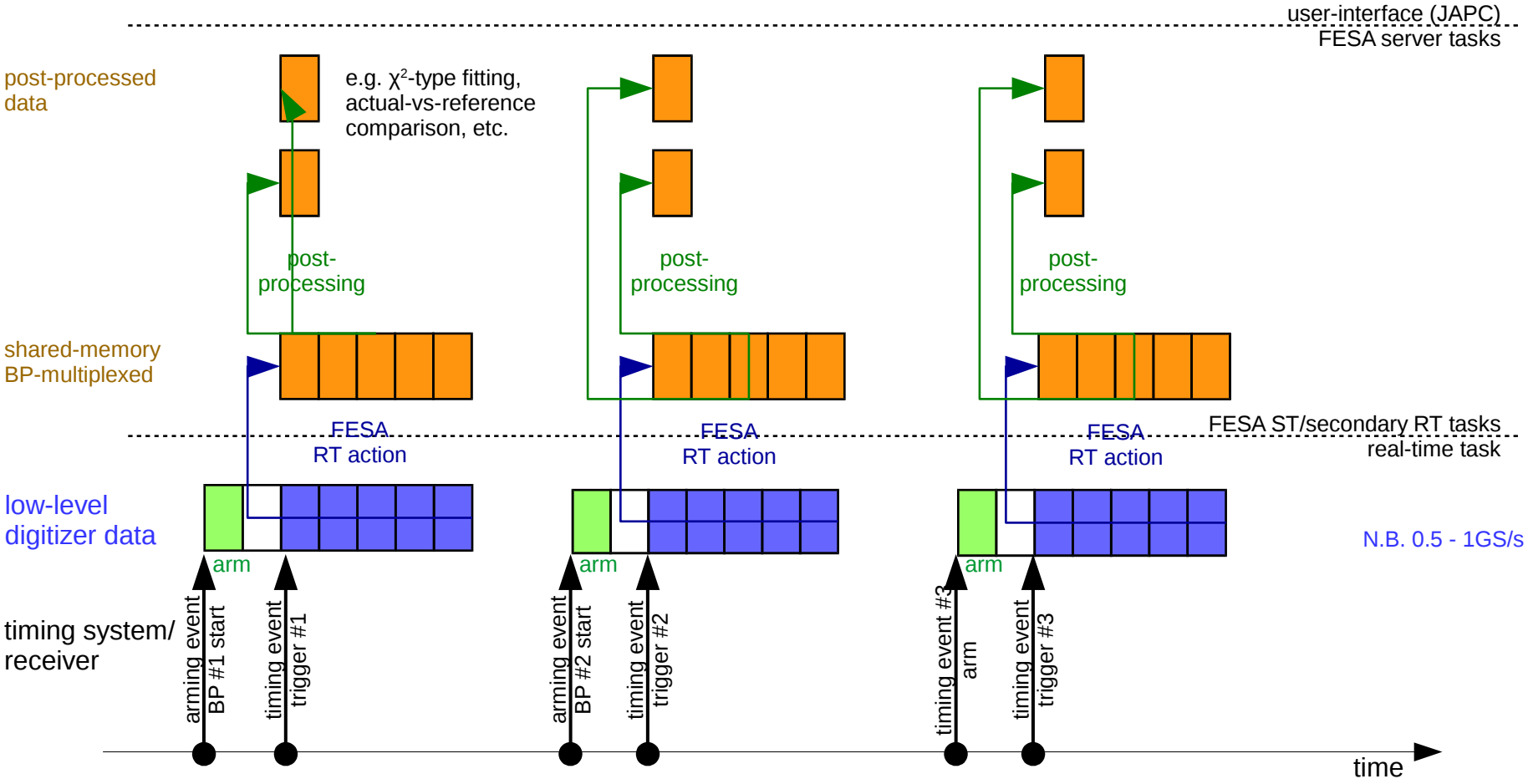

Low-Level Acquisition Modes

A.2) (Rapid) block-mode acquisition II/II

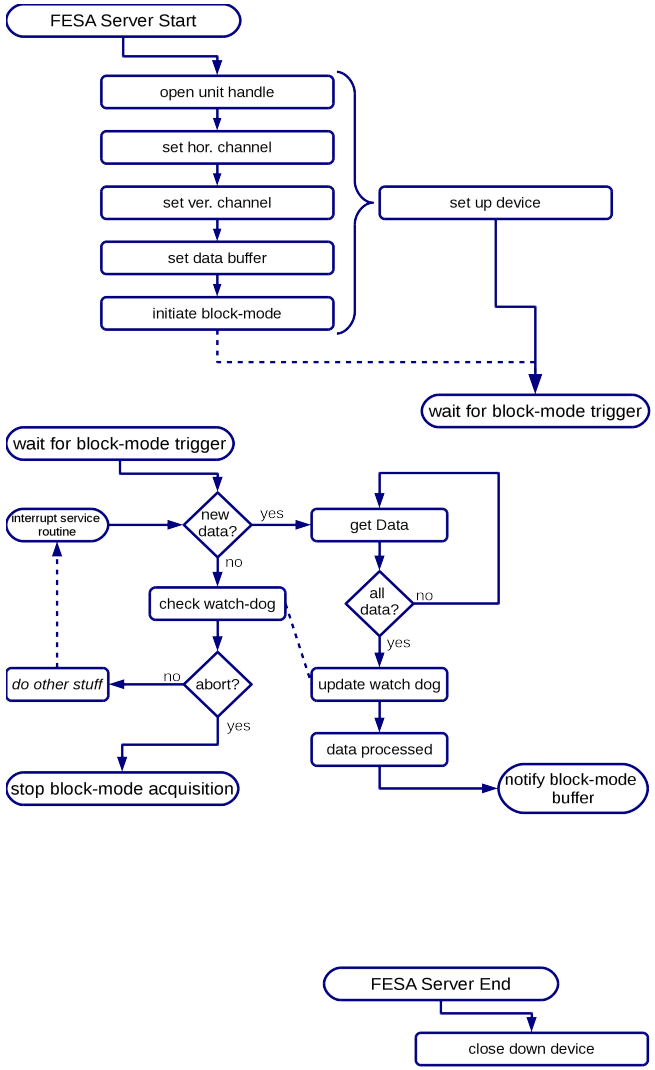

General Signal-Flow Scheme

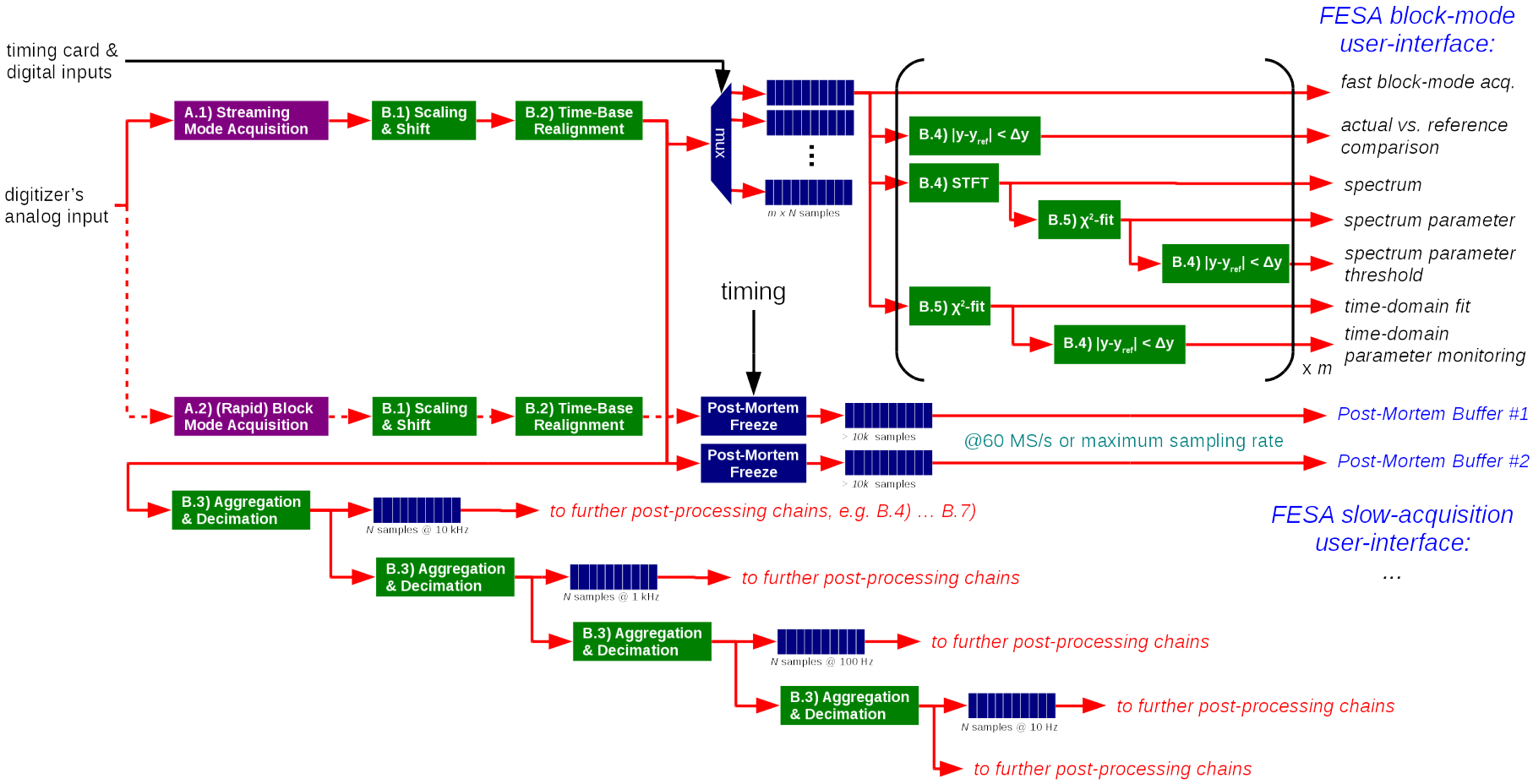

From the Draft-Specification

.../b$group/1_FAIRGSI$docu/1_Machines/2.14_Common_Systems/
2.14.17_Commissioning_Control/2.14.17.1_FC2WG/Specifications/

- Two data acquisition modes:
  - A.1) Streaming-mode acquisition
  - A.2) (Rapid) block-mode acquisition
- Limited set of post-processing modules:
  - B.1) raw-measurement scaling and offset shift
  - B.2) time-base re-alignment (lag & extr. event offset compensation)
  - B.3) data aggregation and decimation (typ. to kHz → Hz)
  - B.4) real-time Short-time Fourier Transform (STFT)
  - B.5) amplitude, phase and frequency detection (I-Q demodulation)
  - B.6) χ^2-type fitting and basic peak detection
  - B.7) actual versus reference comparison → interlock

Module B.1)
raw-measurement scaling and offset shift

- *nomen est omen:*

$$y_{\text{meas}} = a_{\text{cal}} \cdot y_{ADC}[\text{V}] + y_{\text{offset}}$$

Module B.1)
raw-measurement scaling and offset shift

- *nomen est omen:*

$$y_{\text{meas}} = a_{\text{cal}} \cdot y_{ADC}[\text{V}] + y_{\text{offset}}$$

- aim: a_{cal} relating low-level digitizer voltage measurement to physical device property (e.g. kV kicker voltage, RF gap-voltage, ...)

Module B.1)
raw-measurement scaling and offset shift

- *nomen est omen:*

$$y_{\text{meas}} = a_{\text{cal}} \cdot y_{ADC}[\text{V}] + y_{\text{offset}}$$

- aim: a_{cal} relating low-level digitizer voltage measurement to physical device property (e.g. kV kicker voltage, RF gap-voltage, ...)
- calibration factor a_{cal} and offset option, either
  - multiplexed ↔ (possibly) different for each beam processes & beam-production chains
  - non-multiplexed ↔ constant for all beam processes & beam-production chains

Module B.2) time-base re-alignment
Lag & extraction event offset compensation

- Correction for the actual extraction event (see Bunch To Bucket Transfer System[1])
  - Digitizer-Step 1: acquire ‘t_{meas}>10 ms + 10k samples’ with extraction timing event t_0
  - Digitizer-Step 2: wait for timing meta-information informing about actual t_{ext} (low-level mechanism tbc.)
  - Digitizer-Step 3: shift and crop data by $t = t_{ext} - t_0$

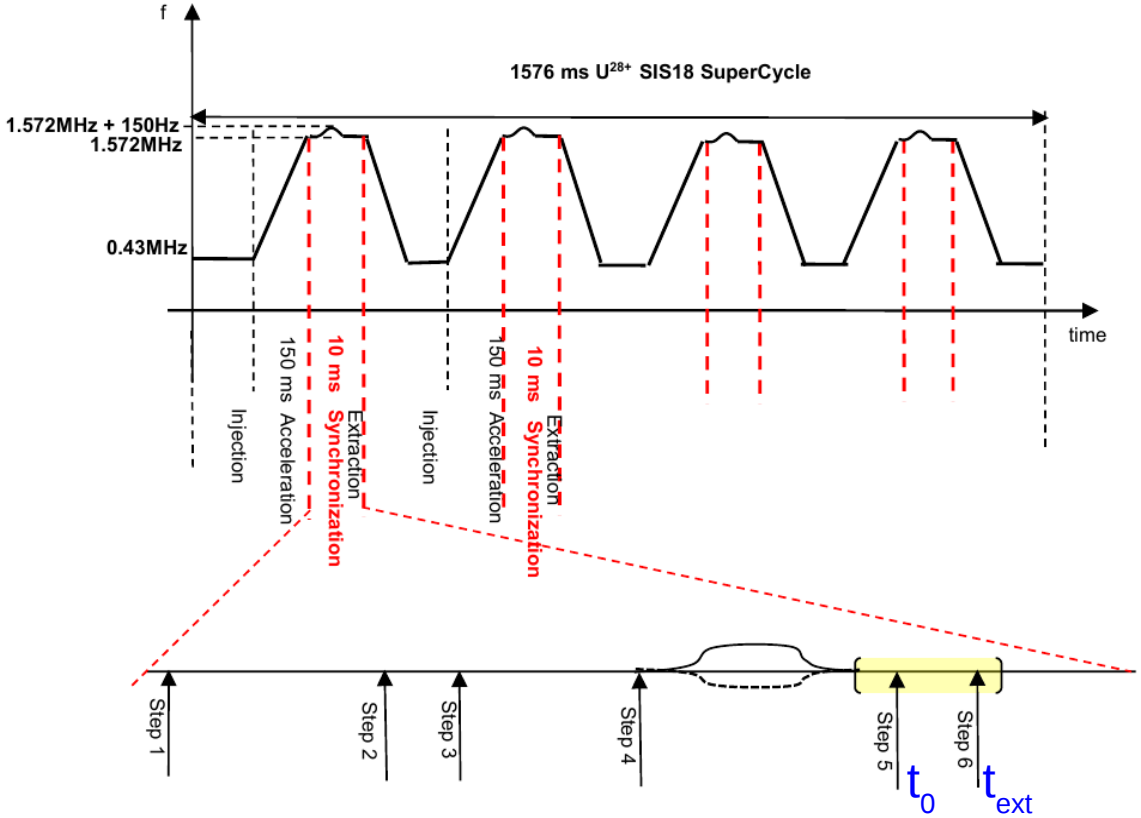

[1]Technical Concept of the FAIR Bunch To Bucket Transfer System (F-TC-C-05e), https://edms.cern.ch/document/1514162/6

Module B.3)
Data Aggregation and Decimation

- Digitizer Streaming to FECs
  - min/max value over the last *N* values
  - simple decimation or arithmetic mean μ of the last N values

Module B.3)
Data Aggregation and Decimation

- Digitizer Streaming to FECs
  - min/max value over the last *N* values
  - simple decimation or arithmetic mean μ of the
- FEC-based Low-Pass Filter and Decimati
  - IR-based band- or low-pass filter (GNU Radio)

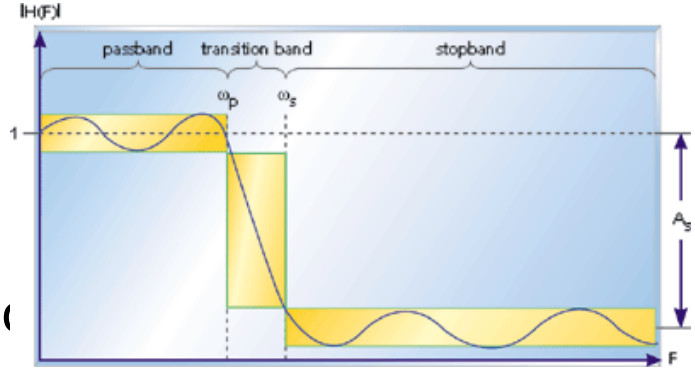

Module B.3)
Data Aggregation and Decimation

- Digitizer Streaming to FECs
  - min/max value over the last *N* values
  - simple decimation or arithmetic mean μ of the last N values
- FEC-based Low-Pass Filter and Decimation
  - IR-based band- or low-pass filter (GNU Radio)
- Band-Pass Filtering and Down-Conversion
  - GNU Radio: '*Frequency Xlating FIR Filter*':

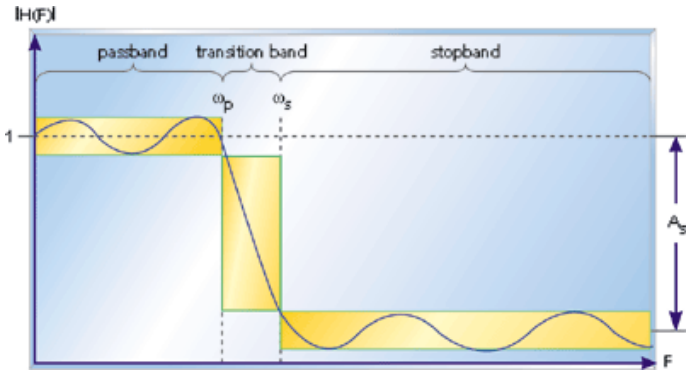

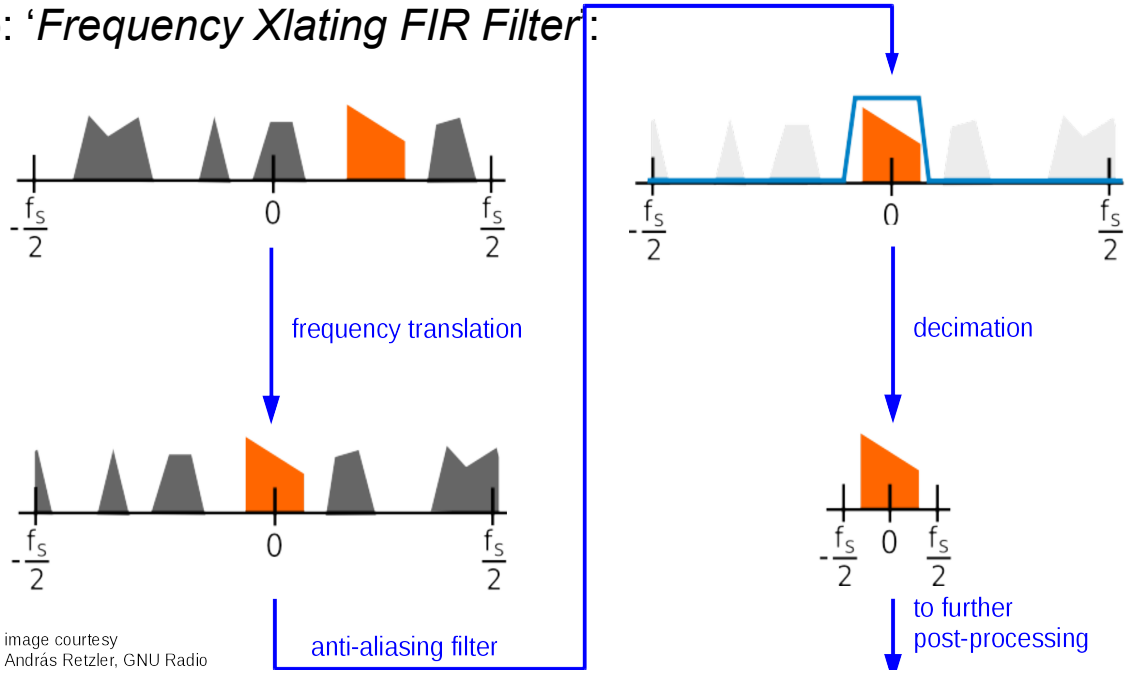

image courtesy
András Retzler, GNU Radio

Module B.4)
Real-time Short-time Fourier Transform (STFT)

$$STFT\{[x]\}(m, f_k) := \sum_{n=-m/2}^{n=+m/2} x_n \cdot w_n \cdot e^{i2\pi f_k} \quad \text{and} \quad f_k = f_{min} + k \cdot \Delta f = f_{min} + k \cdot \frac{f_{max} - f_{min}}{n_f}$$

- with x_n being the n-th sample of the input, w_n one of the user-selectable windowing function (e.g. Hamming, Hann, Blackman, Rectangular, Kaiser), m the acquisition length in terms of samples, f_i in [f_{min}, f_{max}] for which the frequency component in the signal should be evaluated, and n_f the frequency binning (N.B. $k = 0 \ldots n_f$).

1 N.B. $f_{min} = 0$, $f_{max} = f_s/2$ & $\Delta f = 1/m$ implies FFT implementation, DFT or Goertzel algorithm otherwise

Module B.4)
Real-time Short-time Fourier Transform (STFT)

$$STFT\{[x]\}(m, f_k) := \sum_{n=-m/2}^{n=+m/2} x_n \cdot w_n \cdot e^{i2\pi \boxed{f_k}} \quad \text{and} \quad \boxed{f_k = f_{min} + k \cdot \Delta f = f_{min} + k \cdot \frac{f_{max} - f_{min}}{n_f}}$$

- with x_n being the n-th sample of the input, w_n one of the user-selectable windowing function (e.g. Hamming, Hann, Blackman, Rectangular, Kaiser), m the acquisition length in terms of samples, f_i in [f_{min}, f_{max}] for which the frequency component in the signal should be evaluated, and n_f the frequency binning (N.B. $k = 0 \ldots n_f$).

Noteworthy choices, ...

A) whether f_k ↔

- sampling clock f_s → standard spectrum analyser functionality → further norm. needed
- revolution frequency f_{rev} → normalised spectrum → e.g. direct Δp/p or ΔE/E measurement

1 N.B. $f_{min} = 0$, $f_{max} = f_s/2$ & $\Delta f = 1/m$ implies FFT implementation, DFT or Goertzel algorithm otherwise

Module B.4)
Real-time Short-time Fourier Transform (STFT)

$$STFT\{[x]\}(m, f_k) := \sum_{n=-m/2}^{n=+m/2} x_n \cdot w_n \cdot e^{i2\pi \boxed{f_k}} \quad \text{and} \quad \boxed{f_k = f_{min} + k \cdot \Delta f = f_{min} + k \cdot \frac{f_{max} - f_{min}}{n_f}}$$

- with x_n being the n-th sample of the input, w_n one of the user-selectable windowing function (e.g. Hamming, Hann, Blackman, Rectangular, Kaiser), m the acquisition length in terms of samples, f_i in [f_{min}, f_{max}] for which the frequency component in the signal should be evaluated, and n_f the frequency binning (N.B. $k = 0 \ldots n_f$).

Noteworthy choices, ...

A) whether f_k ↔
- sampling clock f_s → standard spectrum analyser functionality → further norm. needed
- revolution frequency f_{rev} → normalised spectrum → e.g. direct Δp/p or ΔE/E measurement

B) on f_{min} & f_{max} whether to compute spectrum[1]
- full spectrum (DC → $f_{max} = f_s/2$ or $f_{rev}/2$), or

1 N.B. $f_{min} = 0$, $f_{max} = f_s/2$ & $\Delta f = 1/m$ implies FFT implementation, DFT or Goertzel algorithm otherwise

Module B.4)
Real-time Short-time Fourier Transform (STFT)

$$STFT\{[x]\}(m, f_k) := \sum_{n=-m/2}^{n=+m/2} x_n \cdot w_n \cdot e^{i2\pi \boxed{f_k}} \quad \text{and} \quad \boxed{f_k = f_{min} + k \cdot \Delta f = f_{min} + k \cdot \frac{f_{max} - f_{min}}{n_f}}$$

- with x_n being the *n*-th sample of the input, w_n one of the user-selectable windowing function (e.g. Hamming, Hann, Blackman, Rectangular, Kaiser), *m* the acquisition length in terms of samples, f_i in [f_{min}, f_{max}] for which the frequency component in the signal should be evaluated, and n_f the frequency binning (N.B. $k = 0 \ldots n_f$).

Noteworthy choices, ...

A) whether f_k ↔
- sampling clock f_s → standard spectrum analyser functionality → further norm. needed
- revolution frequency f_{rev} → normalised spectrum → e.g. direct Δp/p or ΔE/E measurement

B) on f_{min} & f_{max} whether to compute spectrum[1]
- full spectrum (DC → $f_{max} = f_s/2$ or $f_{rev}/2$), or
- subset of spectrum (e.g. *n*-th harmonic of f_{rev} → f_k in [$(n-1)f_{rev}$, $(n+1)f_{rev}$]), or

C) on frequency binning Δf (normally $\Delta f \geq 1/T_{acq}$)

- Examples on next slide

1 N.B. $f_{min} = 0$, $f_{max} = f_s/2$ & $\Delta f = 1/m$ implies FFT implementation, DFT or Goertzel algorithm otherwise

Module B.4) Short-time Fourier Transform
Older example: BBQ @ CERN-PSB, $f_{rev} \approx 2$ MHz

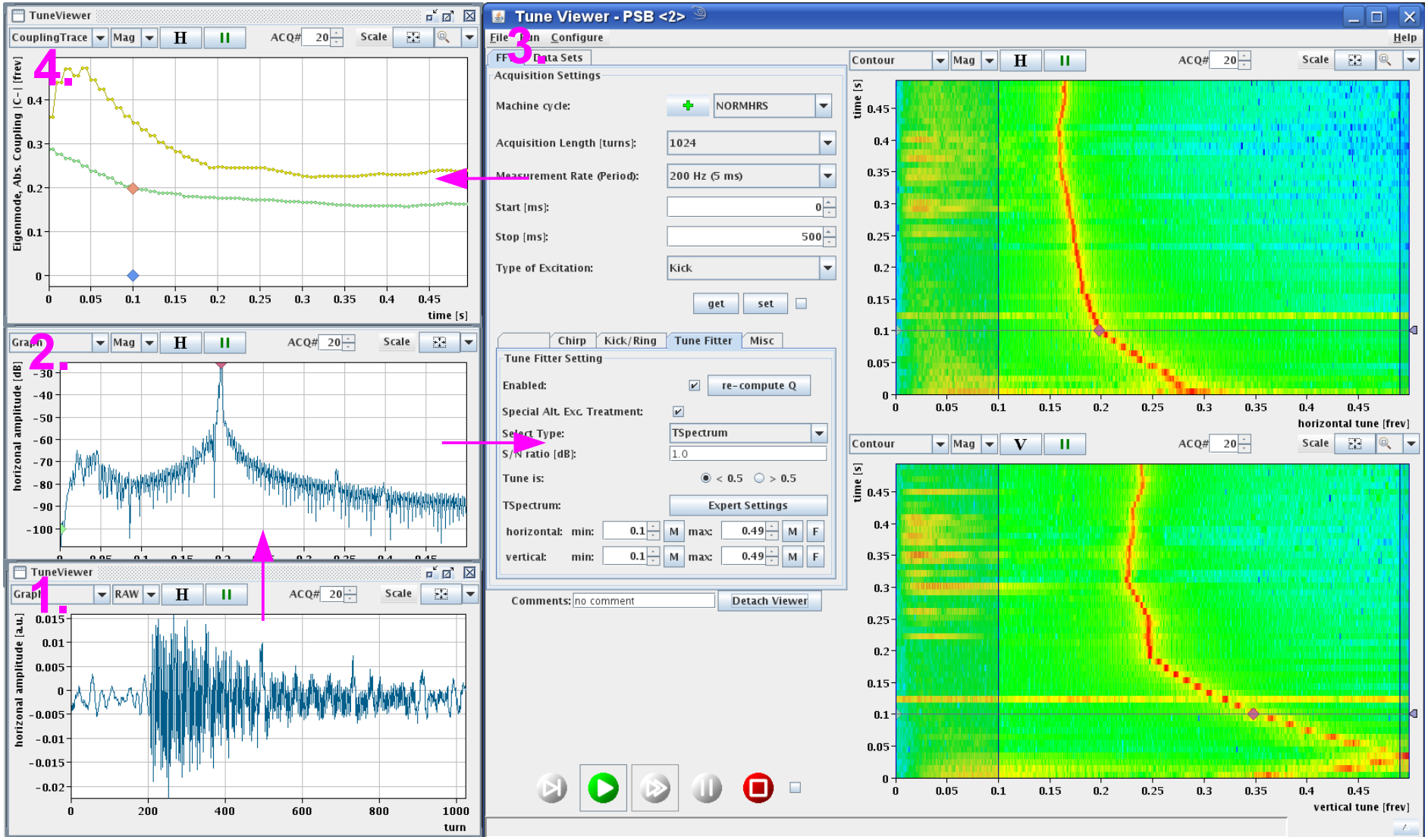

Module B.5)
Amplitude, Phase and Frequency Detection

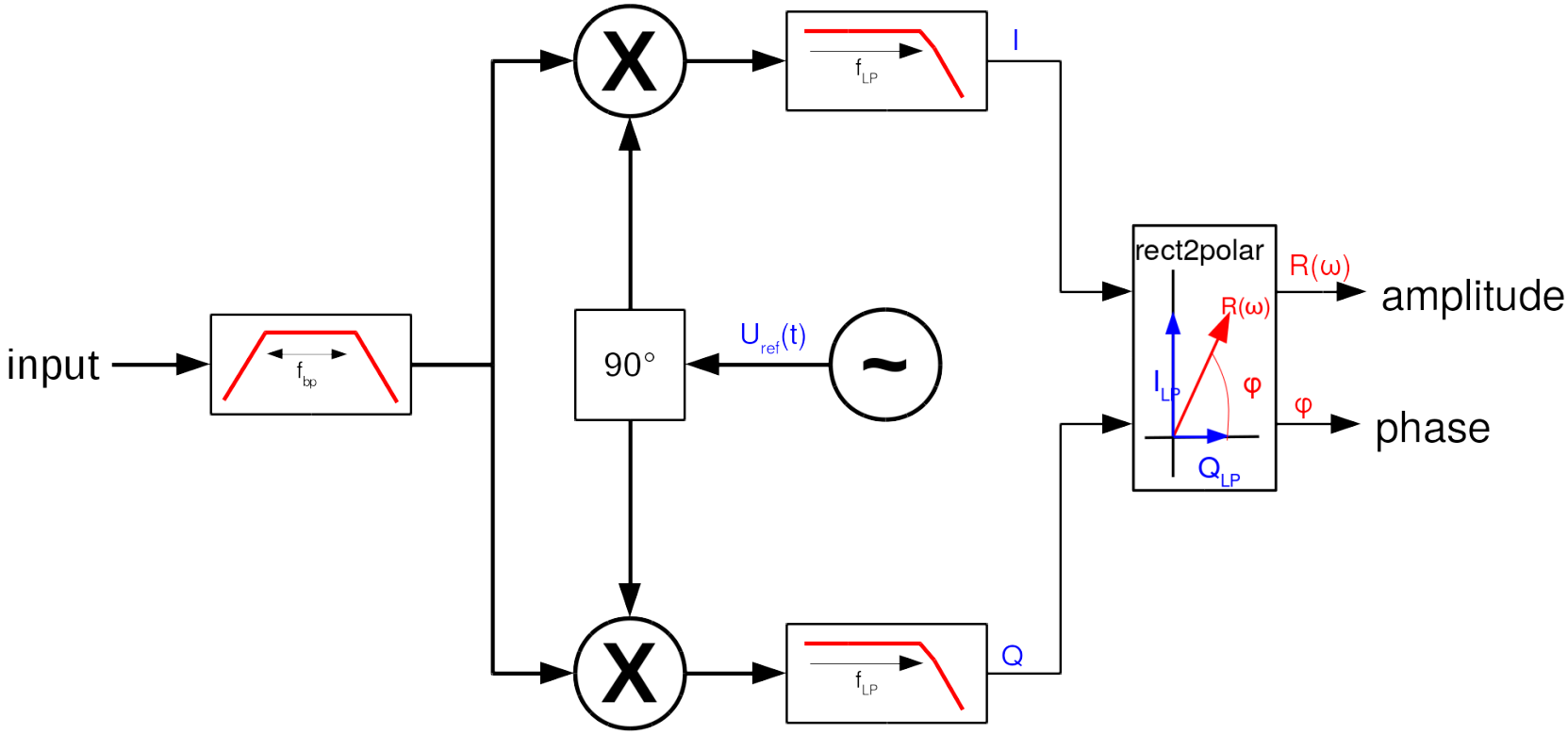

Module B.5)
Amplitude, Phase and Frequency Detection

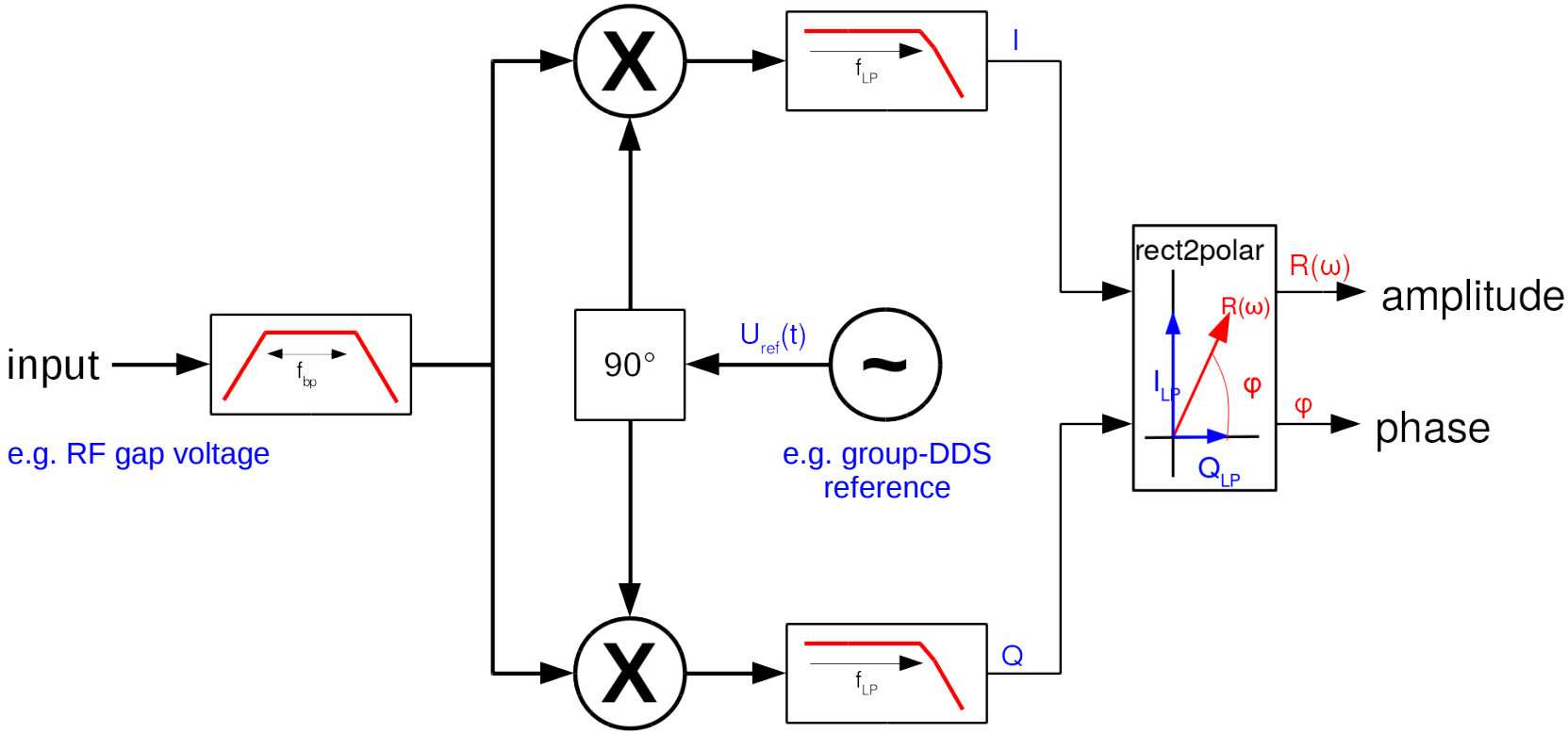

- Main application:
  - Ring-RF Cavity monitoring, actual-to-reference comparison → interlock

Module B.6)
a) χ2-type fitting and basic peak detection

a) Generic Chi-square based fitting (ROOT-based):

$$\chi^2 = \sum_{i=0}^{N} \left(\frac{y_i - f(x_i)}{\sigma_i} \right)^2$$

$$G := \frac{\chi^2}{n_p}$$

$$\Delta G = |G - 1|$$

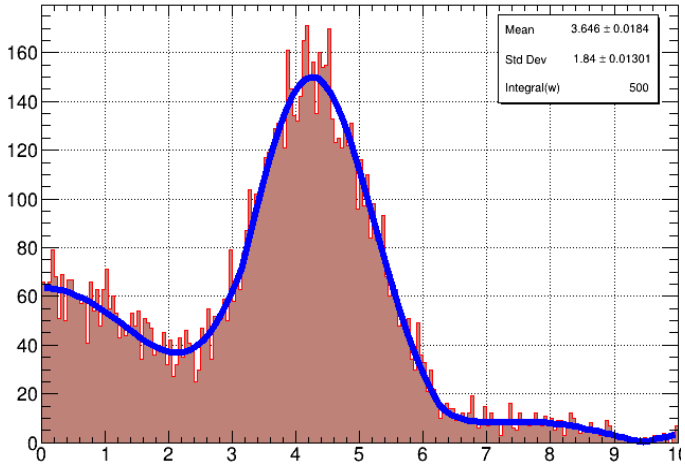

see[1]: https://root.cern.ch/doc/master/classTFormula.html

Module B.6)
a) χ2-type fitting and basic peak detection

a) Generic Chi-square based fitting (ROOT-based):

$$\chi^2 = \sum_{i=0}^{N} \left(\frac{y_i - f(x_i)}{\sigma_i} \right)^2$$

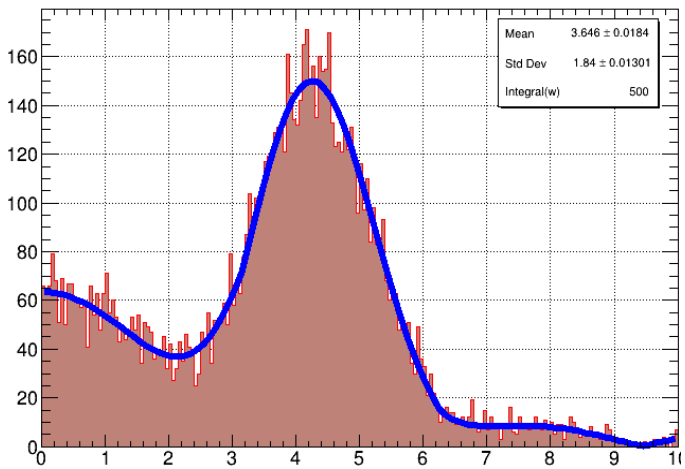

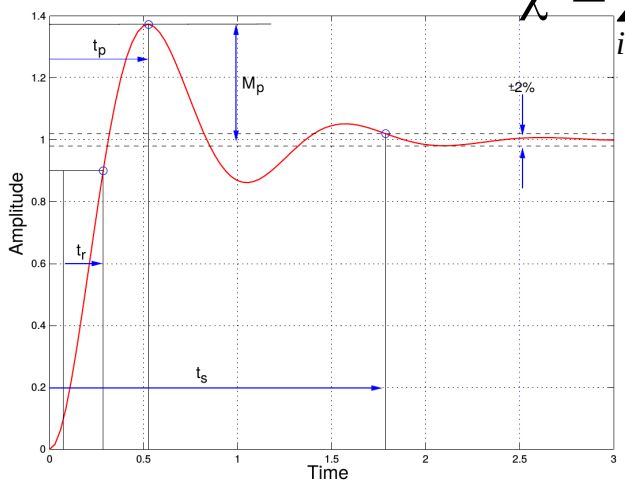

$$G := \frac{\chi^2}{n_p}$$

$$\Delta G = |G - 1|$$

see[1]: https://root.cern.ch/doc/master/classTFormula.html

Module B.6)
a) χ2-type fitting and basic peak detection

a) Generic Chi-square based fitting (ROOT-based):

$$\chi^2 = \sum_{i=0}^{N} \left(\frac{y_i - f(x_i)}{\sigma_i} \right)^2$$

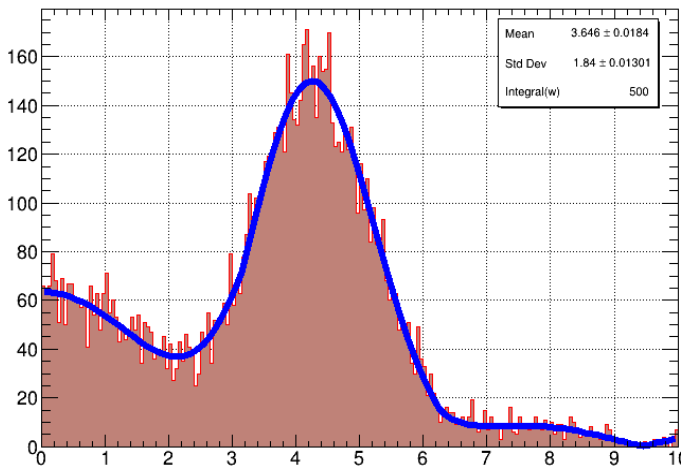

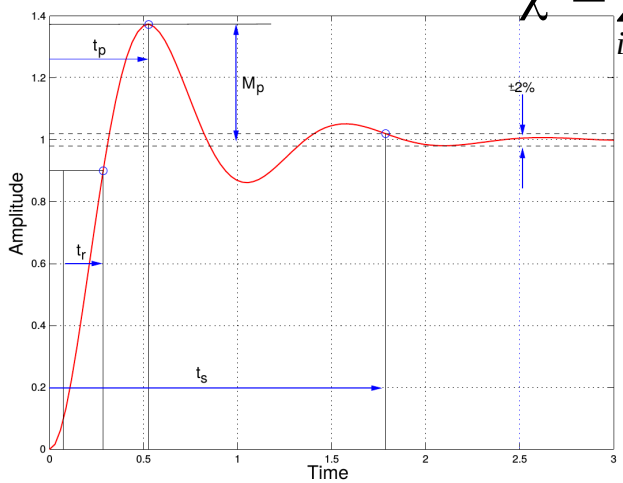

$$G := \frac{\chi^2}{n_p}$$

$$\Delta G = |G - 1|$$

- Function representation (type: string): ROOT allows a wide range of string-based function description (see class documentation for 'TFormula' for reference[1]), some examples include, e.g.
  - 'gaus' for a simple fit of a Gaussian function,
  - 'sin(x)/x'
  - '[0]*sin(x) + [1]*exp(-[2]*x)'
  - 'x + y**2'
  - 'gaus + pol0(3) + expo(4)', 'gaus+(x>30 && x<90)*pol2(3)', or
  - '(x<[0]?0:1*[1])' for fitting the time offset and amplitude of a Heaviside step function.

see[1]: https://root.cern.ch/doc/master/classTFormula.html

Module B.6)
b) Basic Chi-square-based Fitting

a) Generic Chi-square based fitting (ROOT-based)

b) Fitting of spectral peaks:

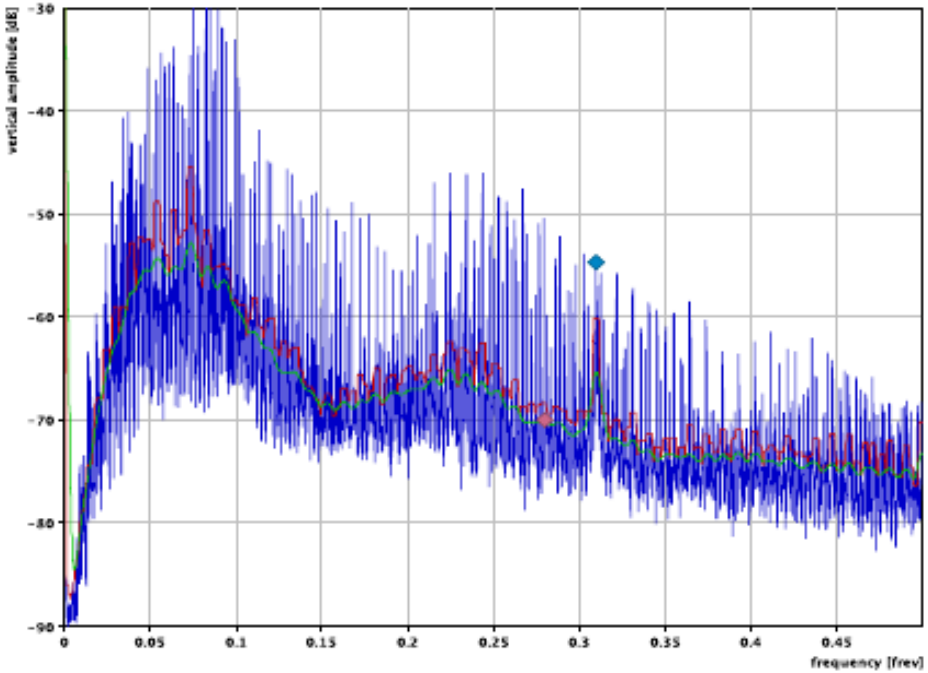

(a) LHC BBQ spectra

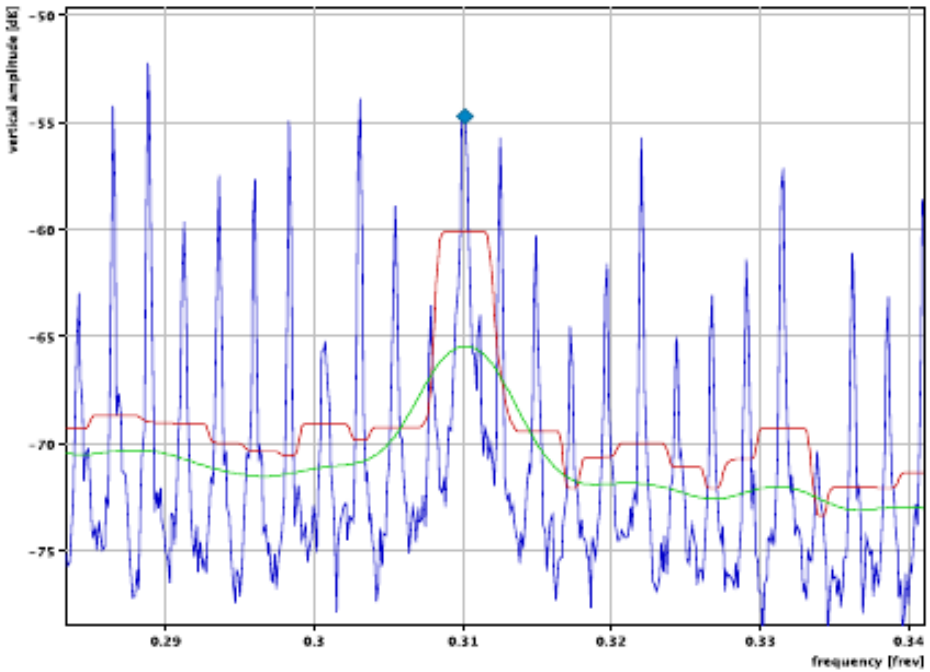

(b) Zoom around betatron tune

[1] R.J. Steinhagen, M. Gasior, and S. Jackson, *"Advancements in the Base-Band-Tune and Chromaticity [..]"*, Proceedings of DIPAC2011

[2] R.J. Steinhagen, "Tune and Chromaticity Diagnostics", CAS, Dourdan, France, 2008, pp.317

Module B.6)
χ2-type fitting and basic peak detection

… based on operational experience at CERN and similar systems, the following post-processing algorithm shall be implemented[1,2]:

1. calculate the raw-spectra $S_{raw}(f)$ based on the n-sample oscillations data,
2. compute (averaged) magnitude spectra $|S_{raw}(f)|$,
3. apply a n_{med}-wide median-filter → $|S_{med}(f)|$,
4. apply a $\pm n_{lp}$-wide sliding average-filter → $|S_{lp}(f)|$,
5. find highest peak $Q_{est.}$ in $|S_{lp}(f)|$ within the given
6. boundaries $Q_{est.} \in [f_{min}, f_{max}]$,
7. find highest peak Q_{raw} in $|S_{raw}(f)|$ around the previous '$Q_{est.} \cdot n/2 \pm n_{med}/2$' estimate,
8. refine the binning-limited Q_{raw} estimate by fitting the tune resonance to a Gaussian distribution.
9. compute the full-width-half-maximum estimate at the peak, and compute the Gaussian-equivalent width as:

$$\sigma \approx \frac{\mathrm{FWHM}}{2\sqrt{2\ln 2}}$$

[1] R.J. Steinhagen, M. Gasior, and S. Jackson, *"Advancements in the Base-Band-Tune and Chromaticity [..]"*, Proceedings of DIPAC2011

[2] R.J. Steinhagen, "Tune and Chromaticity Diagnostics", CAS, Dourdan, France, 2008, pp.317

From the Draft-Specification

.../b$group/1_FAIRGSI$docu/1_Machines/2.14_Common_Systems/
2.14.17_Commissioning_Control/2.14.17.1_FC2WG/Specifications/

- Two data acquisition modes:
  - A.1) Streaming-mode acquisition
  - A.2) (Rapid) block-mode acquisition
- Limited set of post-processing modules:
  - B.1) raw-measurement scaling and offset shift
  - B.2) time-base re-alignment (lag & extr. event offset compensation)
  - B.3) data aggregation and decimation (typ. to kHz → Hz)
  - B.4) real-time Short-time Fourier Transform (STFT)
  - B.5) amplitude, phase and frequency detection (I-Q demodulation)
  - B.6) χ^2-type fitting and basic peak detection
  - B.7) actual versus reference comparison → interlock

General Signal-Flow

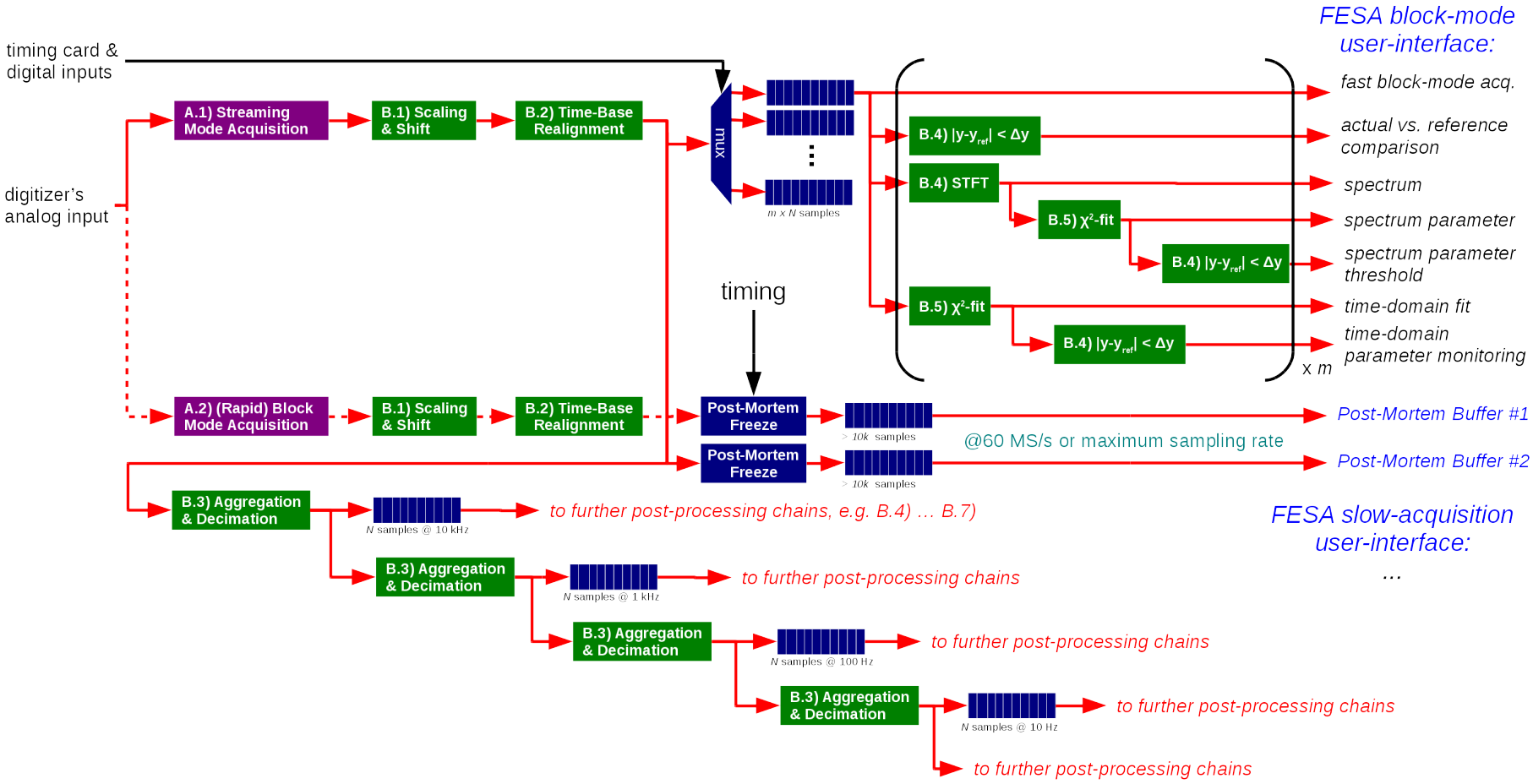

Conclusions

- Main focus: generic acquisition and common post-processing of analog signals in the range of a few MHz to hundreds of MHz (in theory: also > GHz)
  - vendo-specificr HW abstraction (→ future upgrades of newer version or different models)
  - two basic low-level acquisition modes: continuous & rapid block-mode
  - set of 6 post-processing modules
  - maintainability & testability (unit testing, testing, testing, ...)

- Next steps:
  1. (informal) ‘Engineering Check’ via FC2WG (& in-kind partner), main aim:
     - identify important missing features
     - identify important conceptual errors or consistency errors
  2. formal ‘Engineering Check’ via EDMS (↔ collection of signatures of those who gave feedback)
  3. formal ‘EDMS Approval’ (↔ collection of signatures)

- Open Items (N.B. not just digitizer, but also BPMs, BBQ, ...):
  - handling of 3D-data structures in FESA: Japc, Archiving, …
    - ???
  - generic handling of (*N>3)-dim* data structures
    - staged not for 2018
  - transmission of extraction event meta-information (via timing message, data-supply, … ?)
    - staged not for 2018
  - ‘Form’ over ‘Performance’, but should define a minimum standard and practical upper-boundary (engineering margin)
    - parallelisms, FEC platform, ...
  - ...